XMC®

寧波市華益氣動工程有限公司

NINGBO HUAYI PNEUMATIC ENGINEERING CO.,LTD.

地址（Add)：浙江省奉化区溪口镇工业园区华盛路2号

No.2, Huasheng Road, Xikou Industrial Zone,Ningbo,China

总机(Tel)：0574-88882088　88858227

国内销售(Domestic Sales)：0574-88882055　88863177

国际销售（International Sales)：+86-574-88882066

传真(Fax)：0574-88850772　88863177

邮编(P.C)：315502

Http://www.xmc.com.cn　www.xmc-pneumatic.com

www.hy-xmc.com

E-mail:hy-xmc@hy-xmc.com

2025

XMC® 華益氣動 HUAYI PNEUMATIC

2025 产品型册 Catalog

XMC® 華益氣動

HUAYI PNEUMATIC

ISO9001: 2015　ISO14001: 2015　ISO45001: 2018　ROHS CE

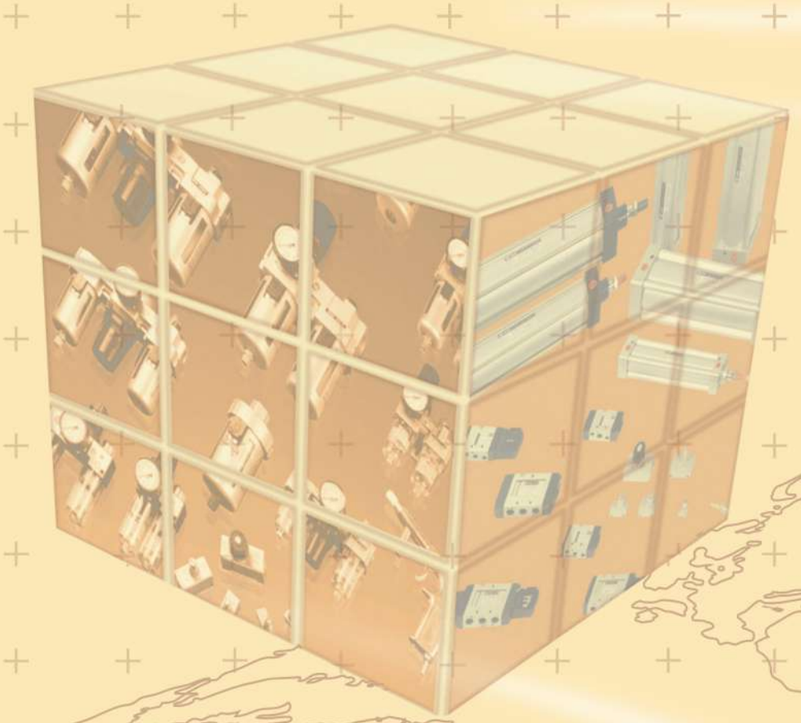

寧波市華益氣動工程有限公司

NINGBO HUAYI PNEUMATIC ENGINEERING CO.,LTD.

www.xmc.com.cn

以山的浑厚、海的广博，诚信、务实的品质，敬业、创新的作风，追求卓越、突现跨越式发展的精神，为实现“打造百年企业”的企业目标，搏击市场，去拥抱美好的明天。

多年来，华益历精图治，奋勇拼搏，开拓出一片崭新的天地。我们立足于"诚信、公正、科学"的基点，本着“信用、勤奋、学习”的企业精神，秉承“以信誉为生命，以产品为先导，以质量为依托，以服务为保证，以价格为杠杆”的营销理念，用一种坚强的信念和毅力树立华益的品牌声誉和企业形象，在国际上独树一道靓丽迷人的风景线。

我们愿以山一样的纯朴，海一样的胸怀，广交天下朋友，更愿意与朋友们心相印，情相系，手相牵，共创美好明天。

董事长：郑岩磊

企业简介

Enterprise Introduction

宁波市华益气动工程有限公司起始于1987年，成立于1996年，是一家已有30余年专业生产经验的气动元件知名厂家，是中国液压气动密封件工业协会理事单位，全国液压气动标准化技术委员会国家（行业）标准制定单位，是第三届奉化市气动工业协会会长单位。

公司于2002年率先在同行中获得ISO9001:2015质量体系认证，后又相继获得欧盟ROHS认证和CE认证。为了更好的开拓国际市场，提高企业的知名度和管理水平，公司于2022年获得了IS014001:2015和ISO45001:2018认证，充分保证了公司产品的高质量水平，为顾客提供高品质产品及优质服务，奠定了坚实的基础。

现在公司的主要气动元件产品有：气源处理件、电磁阀和气缸以及其他的一些气动附件。公司聘用了一批经验丰富的技术人员和高级技术顾问，集中人才开发了一系列具有国际领先水平的气动元件新产品。目前，成熟批量生产的产品品种已达数百种，充分满足了国内外各种不同要求客户的需求。

公司现有厂区占地27亩，厂房面积3.5万平方米，是集研发、生产、销售、物流、办公等于一体的综合性现代化厂区。现有员工130余人，专业技术研发管理人员占总人数的25%。先后成立了“华益技术研发中心”、“浙江大学电磁阀稳定性测试中心”等专业研发机构，配备了三坐标测量仪、高精度大流量测试仪、高低温测试仪、3D打印机等大量的精密加工和检测设备。

目前，公司拥有专利知识产权40多项，其中发明专利5项。是国家高新技术企业，宁波市“专精特新”中小企业。先后获评浙江省AAA级守合同重信用单位，宁波市名牌产品，宁波市知名商标等荣誉称号。

放眼未来，我们将本着“信用、勤奋、学习”的企业精神，向着“华益气动，引领神舟”的企业目标，全力打造“华益气动”的世界品牌。竭诚欢迎新老顾客光临惠顾。

Ningbo Huayi Pneumatic Engineering Co., Ltd. (XMC) was started in 1987 and established in 1996, is a well-known manufacturer of pneumatic components with more than 30 years of professional experience, is a director of the China Hydraulic Pneumatic Seal Industry Association, the national (industry) standard making company of the National Hydraulic and Pneumatic Standardization Technical Committee, and the third president company of Fenghua Pneumatic Industry Association.

XMC took the lead in passing ISO9001:2015 quality system certification in 2002, and subsequently obtained EU ROHS certification and CE certification. In order to better explore the international market, enhance the company's visibility and management level, XMC obtained IS014001:2015 and ISO45001:2018 certifications in 2022, fully ensuring the high quality level of the products and providing customers with high-quality products and services, laying a solid foundation.

Now the main products of XMC include air preparation units, solenoid valves, cylinders, and other pneumatic accessories. XMC has hired a group of experienced technicians and senior technical consultants, and concentrated their talents to develop a series of new products with international leading level. At present, there are hundreds of mature mass-produced products varieties, fully meet the needs of customers with different requirements at domestic and abroad.

The current factory covers an area of 27 acres, with a plant area of 35000 square meters, which is a comprehensive modern factory integrating research and development (R&D), production, sales, logistics, and office. There are currently over 130 employees, with professional technical R&D management personnel accounting for 25% of the total. We have successively established professional R&D institutions such as "Huayi Technology R&D Center" and "Zhejiang University Solenoid Valve Stability Testing Center", equipped with a large number of precision machining and testing equipment such as three-coordinates measuring instruments, high-precision and high-flow testers, high and low temperature testers, 3D printers, etc.

At present, XMC has over 40 patented intellectual property rights, including 5 invention patents. It is a national high-tech enterprise and a specialized and innovative small and medium-sized enterprise in Ningbo. Has successively been awarded the honorary titles of Zhejiang Province AAA level Contract abiding and Creditworthy Unit, Ningbo Famous Brand Product, Ningbo Famous Trademark, etc.

Looking to the future, we will insist on the enterorise spirit of "Honesty, Diligence, and Learning", and strive to build the world brand of "XMC Pneumatic". We warmly welcome both new and old customers to visit us.

XMC®

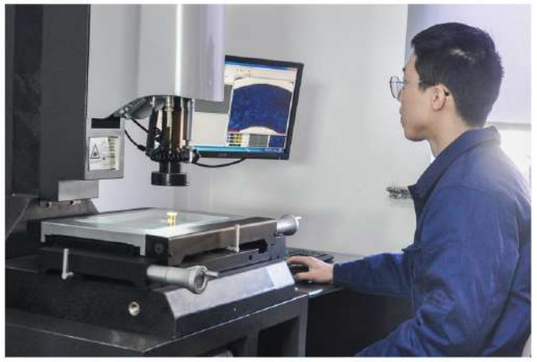

EXCELLENT MANAGEMENT

卓越管理

舞台上即兴演奏的爵士乐手，尽管光彩无限，但其背后却经历了无数正规的训练。华益经历的管理文化创新，也是如此。

Jazz musicians who improvise on stage, though brilliant, have undergone countless formal trainings behind them. The same is true of the management culture innovation that XMC has experienced.

先进的生产管理，有效提高生产效率。产品严格按照国家标准和国际标准组织生产

Advanced production management improves product efficiency effectively.The production is carried out stricatly according to national and international standards,

XMC®

宁波市华益气动工程有限公司

企业荣誉
Enterprise honor


凯新认证（北京）有限公司
环境管理体系认证证书
宁波市华益气动工程有限公司
GB/T24001-2016 / ISO14001:2015 标准
气动元件（气源处理件、单向节流阀、电磁阀、气缸）的设计与制造


凯新认证（北京）有限公司
职业健康安全管理体系认证证书
宁波市华益气动工程有限公司
GB/T 45001-2020/ISO45001:2018 标准
气动元件（气源处理件、单向节流阀、电磁阀、气缸）的设计与制造


凯新认证（北京）有限公司
质量管理体系认证证书
宁波市华益气动工程有限公司
GB/T19001-2016 / ISO9001:2015 标准
气动元件（气源处理件、单向节流阀、电磁阀、气缸）的设计与制造


Kaixin Certification (Beijing) Co.,Ltd.
Certificate of Registration
NINGBO HUAYI PNEUMATIC ENGINEERING CO.,LTD
GB/T24001-2016 / ISO14001:2015 standard


Kaixin Certification (Beijing) Co.,Ltd.
Certificate of Registration
NINGBO HUAYI PNEUMATIC ENGINEERING CO.,LTD
GB/T 45001-2020/ISO45001:2018 standard


Kaixin Certification (Beijing) Co.,Ltd.
Certificate of Registration
Ningbo Huayi Pneumatic Engineering Co.,Ltd
GB/T19001-2016 / ISO9001:2015 standard


高新技术企业
宁波市科学技术局
宁波市财政局
国家税务总局宁波市税务局
二〇二三年


浙江大学
宁波市华益气动工程有限公司
电磁阀可靠性测试
联合实验室


UDEM
CERTIFICATE
ATTESTATION
CERTIFICATE OF MACHINERY DIRECTIVE


宁波市“专精特新”
中小企业
宁波市经济和信息化局
二〇二四年五月

文化市华益流体传动与控制
工程技术中心

发明专利证书


发明专利证书


发明专利证书


发明专利证书


发明专利证书

八大经营理念

1. 接近客户、了解客户；
2. 让员工发挥自主性、创造以及创新精神；
3. 通过培训、提高员工素质；
4. 透过个人来提高生产力；
5. 建立正确的价值观，积极实行；
6. 做内行的事；
7. 宽严并济；
8. 达到最高质量的产品。

Pioneer

1. Close to customers and understand customers;
2. Let employees exert their autonomy, creativity and innovative spirit;
3. Improve the quality of employees through training;
4. Enhance productivity through the individual;
5. Establish correct values and actively implement them;
6. Do what we are good at;
7. Combining leniency and severity;
8. Achieve the highest quality products.

HUAYI PNEUMATIC

International Sales Network 国际销售网络

寧波市華益氣動工程有限公司
NINGBO HUAYI PNEUMATIC ENGINEERING CO., LTD.

产品目录 Products contents

气源处理元件型谱 Type Spectrum of Air Preparation Units	01-03
X系列气源处理元件 X Series Air Preparation Units	04-07
A系列气源处理元件 A Series Air Preparation Units	08-23
HA系列气源处理元件 HA Series Air Preparation Units	24-28
HAF系列大口径空气过滤器 HAF Series Large Size Air Filter	29
HAR系列大口径减压阀 HAR Series Large Size Regulator	30
HAL系列大流量型油雾器 HAL Series Large Size Air lubricator	31
HAFM系列油雾分离器 HAFM Series Mist Separator	32-33
HNA系列气源处理元件 HNA Series Air Preparation Units	34-38
HACE系列气源处理元件 HACE Series Air Preparation Units	39-46
HACE系列嵌入式压力开关气源处理元件 HACE Series Embedded Pressure Switch Air Preparation Units	47
HDA系列气源处理元件 HDA Series Air Preparation Units	48-59
HDAFM系列油雾分离器 HDAFM Series Mist Separator	60
HL系列气源处理元件 HL Series Air Preparation Units	61-70
HLW2042过滤减压阀 HLW2042 Filter Regulator	71
NAR管接式减压阀 NAR Compact Regulator	72
NAP管接式溢流阀 NAP Overflow Valv	73
HMRP系列直动式精密减压阀 HMRP Series Direct-acting precision Micro Regulator	74
HMR35微型精密减压阀 HMR35 Micro Precision Regulator	75
HIR系列精密减压阀 HIR Series Precision Regulator	76-78
HARGZ20手柄内置压力表的减压阀 HARGZ20 Regulator With Integrated Gauge In The Adjusting Knob	79
HVHS系列带锁型二位三通释放式截流阀 HVHS Series Venting Safety Lock-out Valve	80
HAV系列稳定启动电磁阀 HAV Series Soft-start Valve	81-82
HAL-2二次油雾器 HAL-2 Secondary Lubricator	83
HAMC系列排气洁净器 HAMC Serise Exhaust Cleaner	84
HID离心式精密干燥器 HID Centrifugal Precision Dryer	85

華益氣動
HUAYI PNEUMATIC

产品目录 Products contents

HAD系列自动排水器 HAD Serise Auto Drain	86
ZDFS自动放水器 ZDFS Auto Discharger	86-87
气源处理元件 - 附件 Accessories for FRLS	88-91
NP系列电子式数显压力开关 NP Series Electronic Digital Pressure Switch	92
SP系列薄型数字式压力开关 SP Series Thin Digital Pressure Switch	92
管接头 Piping Adapter	93
PQQ喷枪 PQQ Air Gun	94
PSQ喷砂枪 PSQ Sand Blasting Gun	95
HQQ多功能喷枪 HQQ Multifunction Blow Guns	96-97
HC95系列ISO+欧州标准气缸 HC95 Series ISO+European Standard cylinder	98-101
HMB系列日本标准气缸 HMB Series Japan Standard cylinde	102-106
HCQ2系列日本规格薄型气缸 HCQ2 Series Japan specification Compact cylinder	107-108
HCQ2系列日本规格薄型气缸(长行程) HCQ2 Series Japan Specification Compact Cylinder(Long Stroke)	109-110
HVF系列先导型二位五通电磁阀 HVF Series Lead Type Two-position Five-way solenoid valve	111-115
HVFA系列气控阀 HVFA Series Pneumatic Control valve	116
AS系列单向节流阀 AS Series Check valve	117
HVH系列4通手转阀 HVH Series Four- way Hand Valve	118-119
MVFA系列脚踏阀 MVFA Series Foot valve	120
HAQ系列快速排气阀 HAQ Series Quick Exhaust valve	121
HXQ系列快速排气阀 HXQ Series Quick Exhaust Valve	122
HKP系列快速排气阀 HKP Series Quick Exhaust Valve	123
H2W(UW)系列电磁阀(大口径) H2W(UW) Series Solenoid valve(Large Aperture)	124
H2L(US)系列电磁阀(蒸汽型) H2L(US) Series Solenoid valve(Steam Type)	125
HPU系列电磁阀 HPU Series Solenoid valve	126
技术资料 / 单位换算表(美制及英制单位换算) Technical information / Unit conversion table(American and British units conversion)	127
气缸理论输出力表(N) Cylinder theory table output force	128

订购码/Ordering Code

□ □ □ □ □ □ - □ □ □ - □ - □

❶ ❷ ❸ ❹ ❺ ❻ ❼ ❽ ❾ ❿ ⓫

❶ 系列 Series

- X
- A
- HA
- HNA
- HL
- HDA

❷ 功能/Function

- F/过滤器(Filter)
- R/减压阀(Regulator)
- L/油雾器(Lubricator)
- FRU,W/过滤减压阀(Filter Regulator)
- FRUL,C/二联件(FR+L)
- FRL,C/三联件(F+R+L)

❸ 压力表安装方式/Gauge installation

- 无：常规圆形/NO: Regular Round Gauge
- E：嵌入式方形/E: Embedded Square Gauge
- G：嵌入盖板带常规圆形
  G：Embedded Square Cover Plate With Regular Round Gauge
- GZ：手柄内置压力表
  GZ：Gauge in the Knob
- EP：嵌入式压力开关
  EP：Embedded Pressure switch

❹ 规格 Body Size

- 4
- 1000
- 1500
- 2000
- 2500
- 3000
- 4000
- 5000
- 20/30/40
- 800/900
- 825/925
- 930

❺ 无：标准/No：Standard

- A：HL, HDA系列二联件/A：HL HDA Series FR+L

❻ 无：无快速逆流/No：Without Backflow Function

- K：带快速逆流/K：With Backflow Function

❼ 接口螺纹/Port Size

- M5
- 01(1/8)
- 02(1/4)
- 03(3/8)
- 04(1/2)
- 06(3/4)
- 10(1)
- 12(1 1/4)
- 14(1 1/2)
- 20(2)
- 30(3)

❽ 特殊设计1/Special design 1

- 无：标准/NO: Standard
- M: 金属杯/M: Metal cup

注：用于A、HA、HNA、HACE系列
Note：Used for A、HA、HNA、HACE Series

❾ 特殊设计2/Special design 2

- 无：标准/NO: Standard
- D: 自动排水/D: Auto Drain

❿ 无：标准(对应A、HA、HDA系列杯体及防护罩)

- No：Standard(Correspond to A、HA、HDA Series Cup And Protective Cover)
- 1：A系列杯体防护罩/A series cup and protective cover
- 2：HA系列杯体防护罩/HA series cup and protective cover
- 3：金属杯体，金属杯B款为3B/Metal cup, TYPE B metal cup is 3B.
- 4：聚碳酸酯杯体及防护罩/Polycarbonate cup and protective cover

注：用于AFM、HAFM、HDA、HDAFM系列
Note：Used for AFM、HAFM、HDA、HDAFM Series

⓫ 无：标准/No：Standard

- EP信号方式：003/EP Signal output：003
- 见P47页/ See the Page 47

规格/Specifications

组合/Combination	型号 Model	接口螺纹 Port Size	构成元件/Assembly Units			
			空气过滤器 Filter	减压阀 Regulator	油雾器 Lubricator	过滤减压阀 Filter Regulator
AF+AR+AL 	AC1000	M5	AF1000	AR1000	AL1000	
	AC1500	M5-1/8	AF1500	AR1500	AL1500	
	AC2000	1/8~1/4	AF2000	AR2000	AL2000	
	AC2500	1/4~3/8	AF3000	AR2500	AL3000	
	AC3000	1/4~3/8	AF3000	AR3000	AL3000	
	AC4000	3/8~3/4	AF4000	AR4000	AL4000	
	AC5000	3/4~1	AF5000	AR5000	AL5000	
AW+AL 	AC1010	M5			AL1000	AW1000
	AC1510	M5-1/8			AL1500	AW1500
	AC2010	1/8~1/4			AL2000	AW2000
	AC3010	1/4~3/8			AL3000	AW3000
	AC4010	3/8~3/4			AL4000	AW4000
	AC5010	3/4~1			AL5000	AW5000
AF+AR 	AC1020	M5	AF1000	AR1000		
	AC1520	M5-1/8	AF1500	AR1500		
	AC2020	1/8~1/4	AF2000	AR2000		
	AC2520	1/4~3/8	AF3000	AR2500		
	AC3020	1/4~3/8	AF3000	AR3000		
	AC4020	3/8~3/4	AF4000	AR4000		
	AC5020	3/4~1	AF5000	AR5000		

注：HA、HNA系列的组合方法与A系列相同。/Note: The combination methods of HA&HNA series are the same as A series.

使用维护须知/ How to Use and Maintain

1. 使用前注意检查元件在运输过程中是否损坏，连接部位是否松动，然后再安装使用。
2. 安装时请注意气体流动方向，并保持位置垂直。
3. 进出口带缩接时，元件的流量约减小10%；过滤精度每增加一级，流量减小约7%。
4. 带防护罩的元件，使用前一定要使防护罩固定，避免发生危险。
5. 使用减压阀或过滤减压阀时，应先将调节手轮调节至零位，并将压力表、堵头分别安装在减压阀或过滤减压阀相应位置上，并保证其不漏气（压力表、堵头安装位置可以互换），然后通气，调节至相应压力。
6. 使用油雾器时，应先将油量阀针调节至零位，加入恰当的润滑油至油位线，然后根据需要通气后调节至适当的位置。注意：润滑油的牌号，不能选用锭子油及含低级酮、芳香烃的润滑油。
7. 采用金属管子连接时，请注意清除管子内的金属颗粒、粉尘、油污等。

1. Before use, pay attention to check whether the components are damaged during transportation and whether the connection parts are loose, and then install and use.
2. Pay attention to the direction of air flow during installation, and keep the position vertical.
3. When the inlet and outlet with a reducer coupling, the flow rate of the unit is reduced by about 10% approx; The flow rate decreases by about 7% for each additional level of filtration precision.
4. For units with protective cover, the protective cover must be fixed before use to avoid danger.
5. When using the air pressure regulator (R) or filter regulator (FR), the adjusting hand-wheel should be adjusted to the zero position first, and the pressure gauge and plug should be installed on the corresponding position of the air pressure regulator (R) or filter regulator (FR) respectively, and ensure that it does not leak compressed air (the installation position of the pressure gauge and plug can be interchanged), and then let the compressed air in and adjust to the corresponding pressure.
6. When using the lubricator (L), the oil volume valve bolt should be adjusted to the zero position, the appropriate lubricating oil should be filled to the oil level line, and then adjusted to the appropriate position after the compressed air going in as needed. Note: Pay attention to the brand and grade of the lubricating oil; Never use spindle oil and lubricating oil containing low-grade ketones and aromatic hydrocarbons.
7. When using metal pipe connection, please pay attention to remove metal particles, dust, oil stains, etc. in the pipe.

聚碳酸酯杯体的耐化学药品性/Chemical resistance of polycarbonate or nylon bowl

种类 Type	化学药品名 Chemical name	使用用途例 Application examples	材质 Material	
			聚碳酸酯 Polycarbonate	尼龙 Nylon
酸 Acid	盐酸，硫酸，磷酸，铬酸 Hydrochloric acid，Sulfuric acid，Phosphoric acid Chromic acid	金属的酸洗液 Acid washing liquid for metals	△	×
碱 Alkaline	氢氧化钠，氢氧化钾，氢氧化钙，氨水，碳酸钠 Sodium hydroxide (Caustic soda)，Potash，Calcium hydroxide (Slack lime), Ammonia water，Sodium carbonate	金属的脱酯，工业盐，水溶性切削油 Degreasing of metals，Industrial salts Water-soluble，cutting oil	×	○
无机盐 Inorganic salts	硫化钠，硝酸钾，硫酸钠 Sodium sulfi de，Potassium nitrate，Sodium sulfate	–	×	△
氯化溶剂 Chlorine solvents	四氯化碳，氯仿，二氯化乙烯，二氯甲烷 Carbon tetrachloride，Chloroform，Ethylene chloride，Methylene chloride	金属的洗净液，印刷墨，稀释 Cleansing liquid for metals，Printing ink，Dilution	×	△
芳烃类 Aromatic series	苯，甲苯，信纳水 Benzene，Toluene，Paint thinner	涂料，干洗 Coatings，Dry cleaning	×	△
酮类 Ketone	丙酮，甲乙酮，环己烷 Acetone，Methyl ethyl ketone，Cyclohexane	照片用卷，干洗，纺织工业 Photographic fi lm，Dry cleaning Textile industries	×	×
酒精类 Alcohol	乙醇，IPA，甲醇 Ethyl alcohol，IPA，Methyl alcohol	防冻剂，粘接剂 Antifreeze，Adhesives	△	×
油类 Oil	汽油，煤油 Gasoline，Kerosene	–	×	○
酯类 Ester	邻苯二甲酸二甲酯，邻苯二甲酸二己酯，醋酸 Phthalic acid dimethyl，Phthalic acid diethyl Acetic acid	合成油，防锈油添加剂 Synthetic oil，Anti-rust additives	×	○
醚类 Ether	甲醚，乙醚 Methyl ether，Ethyl ether	刹车油的添加剂 Brake oil additives	×	○
胺类 Amino	甲胺 Methyl amino	切削油，刹车油的添加剂，橡胶促进剂 Cutting oil，Brake oil additives，Rubber accelerator	×	×
其它 Others	螺纹紧固剂，海水，检漏器 Thread-lock fl uid，Seawater，Leak tester	–	×	△

○：大体安全 Essentially safe.　△：会受一部分影响 Some effects may occur.　×：有影响 Effects will occur.

注1）如上述问题仍然存在，为了安全起见，请使用金属杯体。
Note 1) When the above factors are present, or there is some doubt, use a metal bowl for safety.

订货须知/How to Order

1. 订货时请注明产品名称、订货号、规格、数量等。
2. 订购过滤器、减压阀、过滤减压阀等元件时，敬请说明过滤精度、压力范围，否则按常规规格订货。
3. 如有特殊要求，敬请来人、来函说明，双方协商解决。

1. When ordering, please indicate the product name, order number, specification, quantity, etc.
2. When ordering air filters (F), pressure regulators (R), filter regulators (FR) and other units, please indicate the filter element filtration accuracy and the pressure range, otherwise the order will be according to the conventional specifications.
3. If there are special requirements, please come or send a letter to explain, and the two parties will negotiate and solve.

特性/Features:

该系列元件包括空气过滤器、减压阀、油雾器及其组合元件，接口螺纹为G1/4，元件结构轻巧，特别适用于小型气动装置。

This series include air filter,pressure regulator, lubricator and their combinations, The Port size is G1/4. The components are light constructure and especially suitable for small pneumatic devices.

XF4过滤器/Filter

订货号/Order No.	XF4
过滤精度/Filter Precision	50μm
重量/Weight	0.15kg
环境温度/Ambient Temperature	5~60℃
最大工作压力/Maximum Working Pressure	1.0MPa

流量特性曲线/ Characteristic Curve of Flow Rate

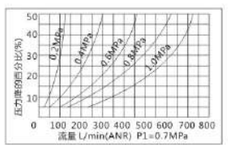

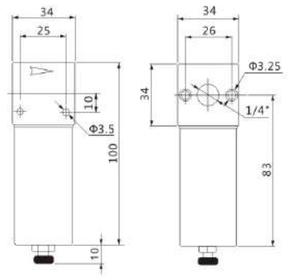

XR4减压阀/Regulator

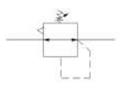

订货号/Order No.	XR4
调压范围/Pressure Regulating Range	0.05~0.25MPa 0.05~0.63MPa
重量/Weight	0.135kg
环境温度/Ambient Temperature	5~60℃
最大工作压力/Maximum Working Pressure	1.0MPa

流量特性曲线/ Characteristic Curve of Flow Rate

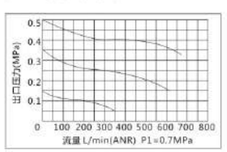

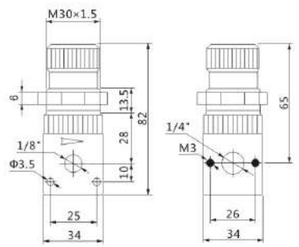

XL4油雾器/Lubricator

订货号/Order No.	XL4
油雾平均粒径/Average particle size of oil mist	<50μm
重量/Weight	0.15kg
环境温度/Ambient Temperature	5~60℃
最大工作压力/Maximum Working Pressure	1.0MPa

流量特性曲线/ Characteristic Curve of Flow Rate

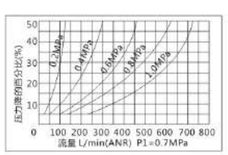

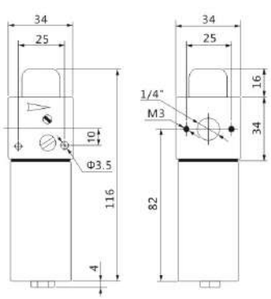

PNEUMATIC
X系列气源处理元件/ X Series Air Preparation Units

XFRU4过滤减压阀/Filter Regulator

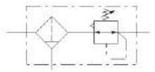

订货号/Order No.	XFRU4
过滤精度/Filter Precision	50μm
调压范围/Pressure Regulating Range	0.05~0.25MPa 0.05~0.63MPa
环境温度/Ambient Temperature	5~60℃
最大工作压力/Maximum Working Pressure	1.0MPa
重量/Weight	0.17kg

流量特性曲线/ Characteristic Curve of Flow Rate

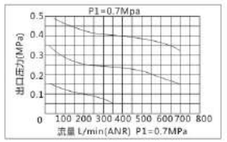

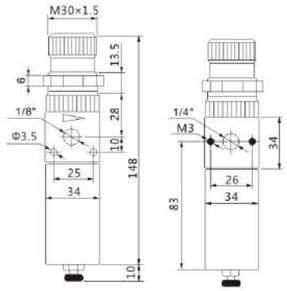

XFRUL4二联件/Combination Unit (FR+L)

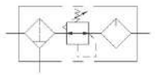

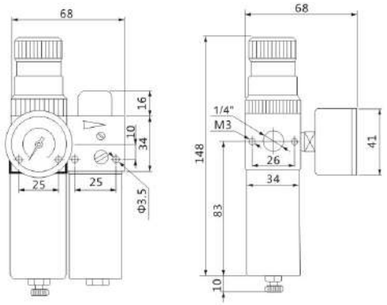

XFRL4三联件/Combination Unit (F+R+L)

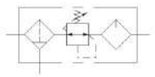

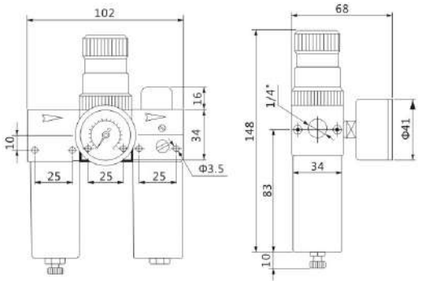

连接方式/Connection Mode

说明：

A-调节针阀。调节油量大小。

B-加油孔螺栓。加油时首先切断气源，然后将B拧下加油至规定高度，加油完毕后将B拧上，保证密封。

C-压力调节手轮。调节压力时将C垂直向上提至调节位置，转动C调节至所需压力，然后垂直压下，锁定手轮C，保持压力稳定。

Note:

A - Needle adjusting valve. Adjust the amount of oil spray.

B - Oil filling hole bolt. When oil refueling, firstly cut off the air source. And then screw B out, filling the oil to the required height. After refueling, screw B on to ensure the sealing.

C - Pressure regulating hand wheel.When adjusting the pressure, lift C up to the adjusting position vertically, turn C to adjust the required pressure, then press down vertically, lock the hand wheel C, and keep the pressure stable.

二联件连接方式 /Connecting Mode of Double-link Unit

XFRU4+XL4

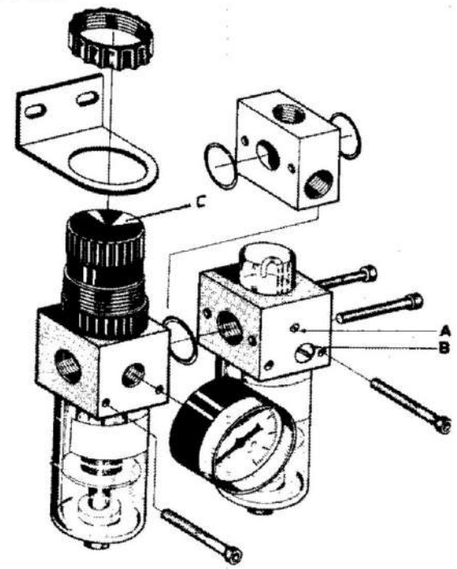

三联件连接方式/Connecting Mode of Triple-link Unit

XF4+XR4+XL4

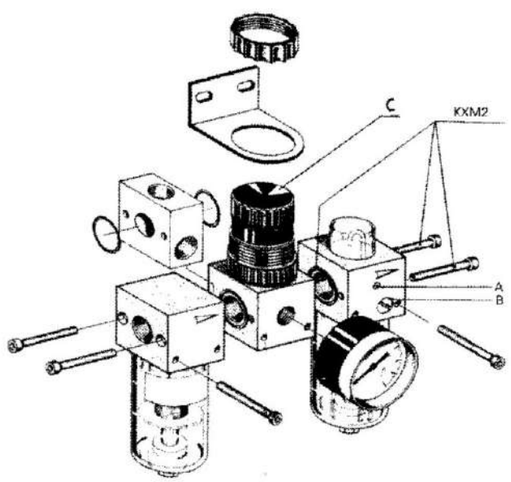

结构简图/ Structural Diagram

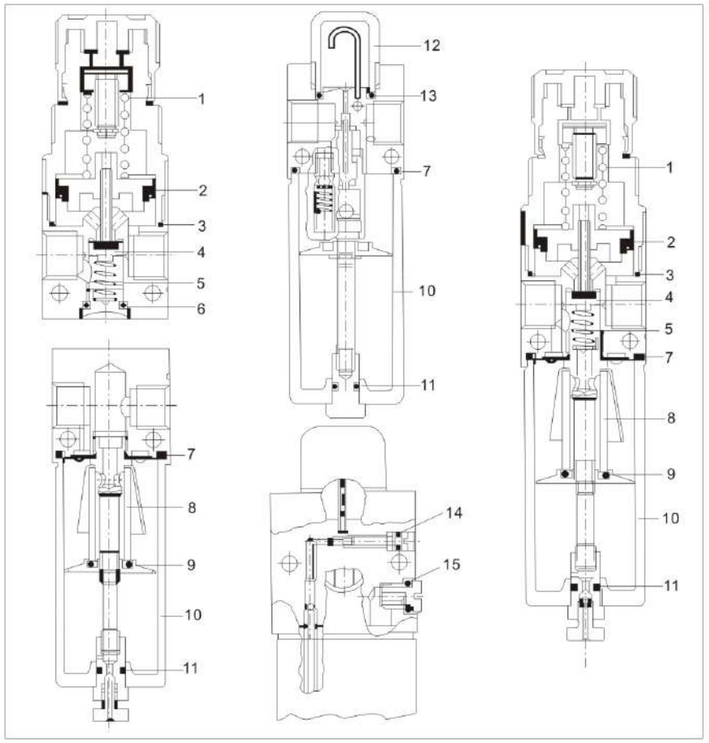

序号/No	数量/Qty	名称/Denomination
1	1	调压弹簧/Pressure Adjusting Spring
2	1	Y形圈/Y-ring
3	1	O形圈/O-ring
4	1	阀芯组件/Valve Core Assembly
5	1	平衡弹簧/Balance Spring
6	1	O形圈/O-ring
7	1	O形圈/O-ring
8	1	滤芯/Filter Element
9	1	O形圈/O-ring
10	1	存水杯/Water Storage Cup
11	1	O形圈/O-ring
12	1	油窗/Oil Window
13	1	O形圈/O-ring
14	1	O形圈/O-ring
15	1	O形圈/O-ring

注: 所列易损件数量均为单个元件所含的数量。
Note: The quantity of the listed fragile parts is the quantity for each unit.

附件：/Accessories

拼帽/Joint Cap XRG	支架/Bracket XSG	中间体/Middle Part XIR	压力表 G36-10-01 /Pressure Gauge	缩接/Reducer 0161310
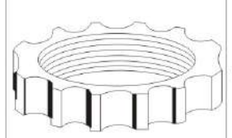	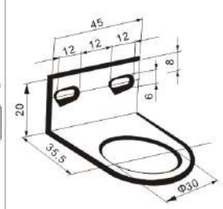	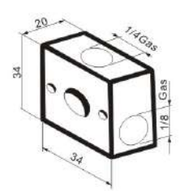		

A系列气源处理组合元件(三联件)/A Series Combination Unit(F+R+L) AC1000~5000系列/Series



符号/Symbol

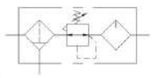

规格/Specification

保证耐压力/Ensured Pressure Resistance	1. 5MPa(15kgf/cm²)
最高使用压力/Highest Working Pressure	1.0MPa(10kgf/cm²)
环境及流体温度/Ambient and Fluid Temperature	5~60℃
*过滤精度/*Filter Precision	25μm
建议用油/Recommended Oil Use	透平1号油/Turbine No.1 Oil ISOVG32
容器材料/Container Material	聚碳酸酯/Polycarbonate
防护罩/Protective Cover	AC1000-2000(无/Not Available) AC2500-5000(有/Available)
调压范围/Pressure Regulating Range	AC1000-1500: 0.05-0.7MPa(0.5-7kgf/cm²) AC2000-5000: 0.05-0.85MPa(0.5-8.5kgf/cm²)
阀型/Valve Type	带溢流型/ WIith Overflow

*还有5、50μm可供选择。/ *5,50μm are available

型号/Model		规格/ Specifications							配件 /Accessories	
		组件/Assembiy			注2)额定流量 /Note 2)Rated Flow(L/min)	注3)接管口径 //Note 3)Port Size(G)	压力表口径 /Pressure Gauge Port	重量 /Weight (kg)	托架 /Bracket	压力表 /Pressure Gauge
手动放水型/ Manual drain	注1）自动排水型/ Note 1) Auto drain	过滤器/ Filter	减压阀/ Regulator	油雾器/ Lubricator						
AC1000-M5	无/NO	AF1000	AR1000	AL1000	90	M5	1/16	0.26	Y10L	G27-10-R1
AC1500-M5	无/NO	AF1500	AR1500	AL1500	200	M5	1/8	0.223	Y10L	G36-10-01
AC1500-01	无/NO					1/8				
AC2000-01	AC2000-01D	AF2000	AR2000	AL2000	500	1/8	1/8	0.74	Y20L	G36-10-01
AC2000-02	AC2000-02D					1/4				
AC2500-02	AC2500-02D	AF3000	AR2500	AL3000	1500	1/4	1/8	1.04	Y30L	
AC2500-03	AC2500-03D					3/8				
AC3000-02	AC3000-02D	AF3000	AR3000	AL3000	2000	1/4	1/8	1.18	Y30L	
AC3000-03	AC3000-03D					3/8				
AC4000-03	AC4000-03D	AF4000	AR4000	AL4000	4000	3/8	1/4	2.14	Y40L	G46-10-02
AC4000-04	AC4000-04D	AF4000-06	AR4000-06	AL4000-06	4500	1/2	1/4	2.47	Y50L	
AC4000-06	AC4000-06D					3/4				
AC5000-06	AC5000-06D	AF5000	AR5000	AL5000	5000	3/4	1/4	3.82	Y60L	
AC5000-10	AC5000-10D					1				

注1）AC2000有两种自动排水结构可选，脉冲式自动排水器为常规选型，还有杠杆式自动排水器可选，订货时用"D2"表示；AC2500-AC5000自动排水器结构以杠杆式为常规选型，还有浮球式自动排水器可选，详细说明请参阅自动排水器介绍。
注2）供应压力为0.7MPa(7.1kgf/cm²)设定压力为0.5MPa(5.1 kgf/cm²)的情况下。
注3）接管口径另有Rc、NPT螺纹可供选择。
Note 1) There are 2 types auto drain for AC2000, pulsed type and lever type. " D"means normal auto drain, pulsed type: D2"means lever type auto drain. The normal auto drain for AC2500 - AC5000 is lever type, but the float type auto drain is available for choose. Please check the details from AUTO DRAIN in page 86~87.
Note 2) The inlet pressure is 0.7MPa(7.1 kgf/cm²), the set pressure is 0.5MPa(5. 1kgf/cm²)
Note 3) Rc ,NPT thread are available.

外形尺寸图/Overall Dimension Drawing(mm)

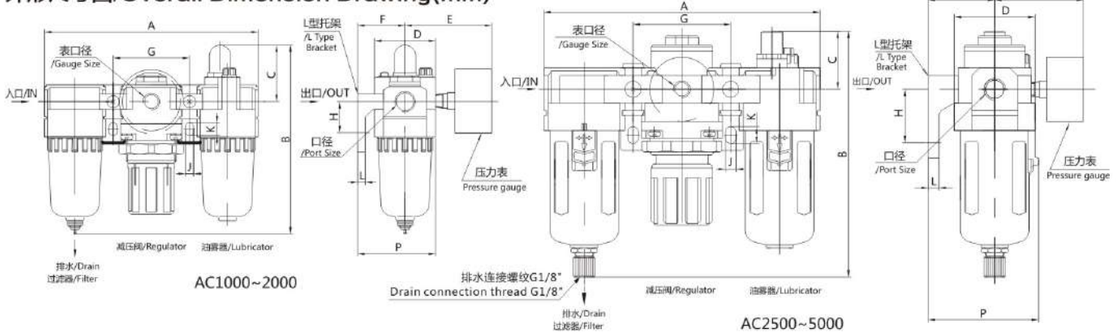

尺寸表/ Dimension Sheet (mm)

型号/Model	口径/Port Size(G)	A	B	C	D	E	F	G	H	J	K	L	P	B (带自动排水器)/B(With Auto drain)	
AC1000	M5	91	91	25.5	25	26	25	33	20	4.5	7.5	5	38.5	无/NO	
AC1500	M5 , 1/8	109	92	26	29	47	27	39	20	4.5	7.5	5	41.5	无/NO	
AC2000	1/8~1/4	140	122	38	40	57	30	50	24	5.5	8.5	5	50	145	*160
AC2500	1/4~3/8	181	158	38	53	61	41	64	35	7	11	7	70.5	172	
AC3000	1/4~3/8	181	158	38	53	61	41	64	35	7	11	7	70.5	172	
AC4000	3/8~1/2	238	191	41	70	66	50	84	40	9	13	7	88	196	
AC4000-06	3/4	253	191	40.5	70	70	50	89	40	9	13	7	88	196	
AC5000	3/4~1	300	268	48	90	76	70	105	50	12	16	10.5	115	273	

*标注尺寸为杠杆式自动放水器高度尺寸。*This size is for lever type auto drain.

流量特性曲线/ Characteristic Curve of Flow Rate

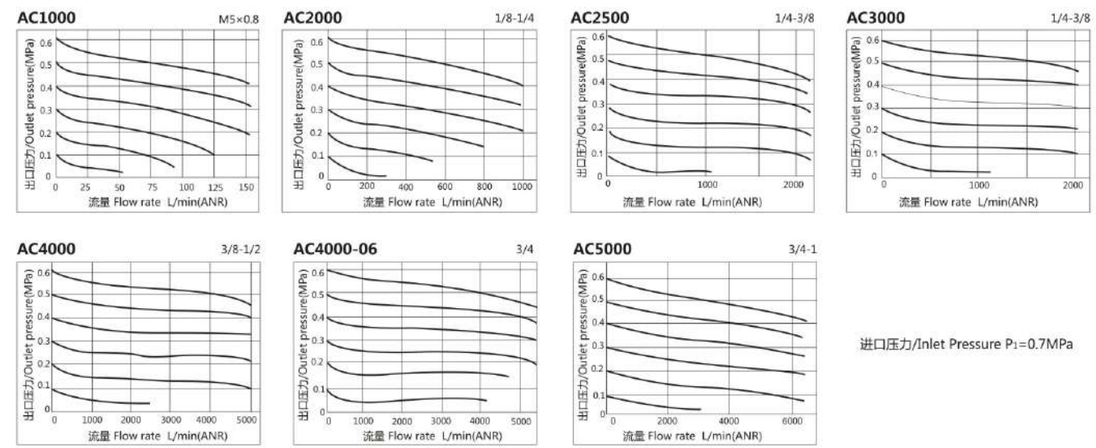

进口压力/Inlet Pressure P_1=0.7MPa

压力特性曲线/Characteristic Curve of Pressure

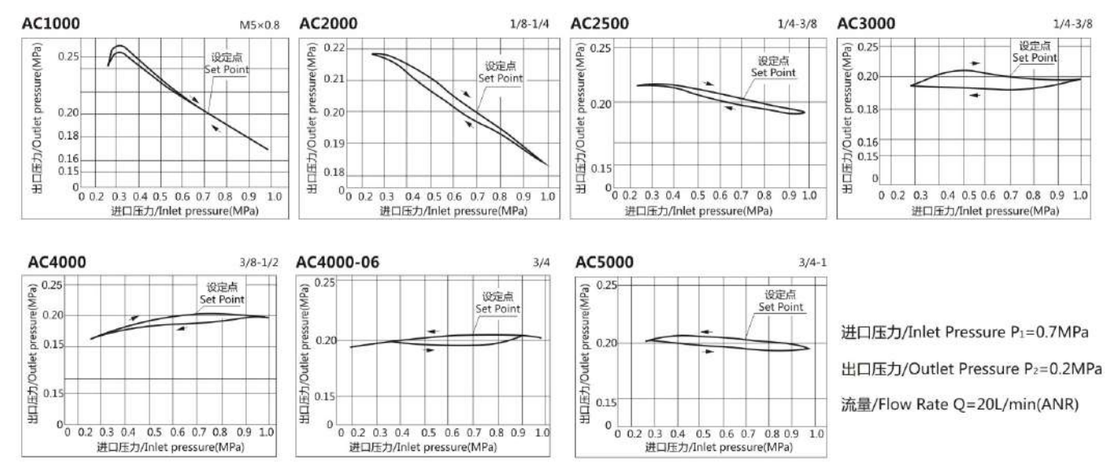

进口压力/Inlet Pressure P_1=0.7MPa

出口压力/Outlet Pressure P_2=0.2MPa

流量/Flow Rate Q=20L/min(ANR)

A系列气源处理组合元件(二联件)/A Series Combination Unit(FR+L) AC1010~5010系列/Series



符号/Symbol

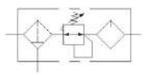

规格/Specification

保证耐压力/Ensured Pressure Resistance	1. 5MPa(15kgf/cm²)
最高使用压力/Highest Working Pressure	1.0MPa(10kgf/cm²)
环境及流体温度/Ambient and Fluid Temperature	5~60℃
*过滤精度/*Filter Precision	25μm
建议用油/Recommended Oil Use	透平1号油/Turbine No.1 Oil ISOVG32
容器材料/Container Material	聚碳酸酯/Polycarbonate
防护罩/Protective Cover	AC1010~2010(无/Not Available) AC3010~5010(有/Available)
调压范围/Pressure Regulating Range	AC1010-1510: 0.05~0.7MPa(0.5~7kgf/cm²) AC2010~5010: 0.05~0.85MPa(0.5~8.5kgf/cm²)
阀型/Valve Type	带溢流型/ With Overflow

*还有5、50μm可供选择。/ *5,50μm are available

型号/Model		规格/Specifications						配件 /Accessories	
		组件/Assembly		注2)额定流量 /Note 2)Rated Flow(L/min)	注3)接管口径 /Note 3) Port Size(G)	压力表口径 /Pressure Gauge Port	重量 /Weight (kg)	托架 /Bracket	压力表 /Pressure Gauge
手动放水型/ Manual drain	注1) 自动排水型/ Note 1) Auto drain	过滤减压阀/ Filter Regulator	油雾器/ Lubricator						
AC1010-M5	无/NO	AW1000	AL1000	90	M5	1/16	0.22	Y10T	G27-10-R1
AC1510-M5	无/NO	AW1500	AL1500	200	M5	1/8	0.172	Y10T	G36-10-01
AC1510-01	无/NO				1/8				
AC2010-01	AC2010-01D	AW2000	AL2000	500	1/8	1/8	0.66	Y20T	G36-10-01
AC2010-02	AC2010-02D				1/4				
AC3010-02	AC3010-02D	AW3000	AL3000	1700	1/4	1/8	0.98	Y30T	
AC3010-03	AC3010-03D				3/8				
AC4010-03	AC4010-03D	AW4000	AL4000	3000	3/8	1/4	1.93	Y40T	G46-10-02
AC4010-04	AC4010-04D				1/2				
AC4010-06	AC4010-06D	AW4000-06	AL4000-06	3000	3/4	1/4	1.99	Y50T	
AC5010-06	AC5010-06D	AW5000	AL5000	4000	3/4	1/4	3.20	Y60T	
AC5010-10	AC5010-10D				1				

注1) AC2010有两种自动排水结构可选，脉冲式自动排水器为常规选型，还有杠杆式自动排水器可选，订货时用“D2”表示；AC3010-AC5010自动排水器结构以杠杆式为常规选型，还有浮球式自动自动排水器可选，详细说明请参阅自动排水器介绍。

注2) 供应压力为0.7MPa(7.1kgf/cm²)设定压力为0.5MPa(5.1 kgf/cm²)的情况下。

注3) 接管口径另有Rc、NPT螺纹可供选择。

Note 1) There are 2 types auto drain for AC2010, pulsed type and lever type. "D"means normal auto drain, pulsed type; "D2"means lever type auto drain. The normal auto drain for AC3010-AC5010 is lever type, but the float type auto drain is available for choose. Please check the details from AUTO DRAIN in page 86~87.

Note 2)The inlet pressure is 0.7MPa(7.1 kgf/cm²), the set pressure is 0.5MPa(5. 1kgf/cm²).

Note 3)Rc ,NPT thread are available.

外形尺寸图/Overall Dimension Drawing(mm)

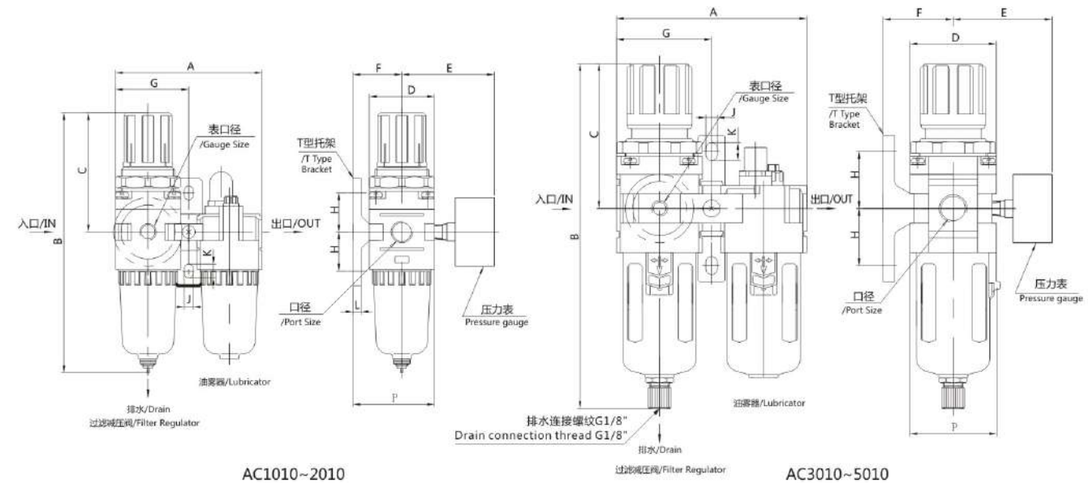

AC1010~2010 AC3010~5010

尺寸表/Dimension Sheet (mm)

型号/Model	口径/Port Size(G)	A	B	C	D	E	F	G	H	J	K	L	P	B (带自动排水器)/B(With Auto drain)	
AC1010	M5	58	113	50.5	25	26	25	29	20	4.5	7.5	5	38.5	无/NO	
AC1510	M5 , 1/8	70	117	51	29	47	27	35	20	4.5	7.5	5	41.5	无/NO	
AC2010	1/8~1/4	90	158	78	40	56.8	30	45	24	5.5	8.5	5	50	182	*197
AC3010	1/4~3/8	117	208	92.5	53	60.8	41	58.5	35	7	11	7	70.5	223	
AC4010	3/8~1/2	154	256	112	70	70.5	50	77	40	9	13	7	88	262	
AC4010-06	3/4	164	261	114	70	70.5	50	82	40	9	13	7	88	266	
AC5010	3/4~1	195	338	116	90	75.5	69.8	97.5	50	12	16	10.5	115	343	

* 标注尺寸为杠杆式自动放水器高度尺寸。
* This dimension is for lever type auto drain.

A系列空气过滤器/A Series Air Filter
AF1000~5000系列/Series

符号/Symbol

规格/Specification

保证耐压力/Ensured Pressure Resistance	1. 5MPa(15kgf/cm²)
最高使用压力/Highest Working Pressure	1.0MPa(10kgf/cm²)
环境及流体温度/ Ambient and Fluid Temperature	5~60℃
*过滤精度/Filter Precision	25μm
滤芯材质/Filter material	铜/Brass
容器材料/Container Material	聚碳酸酯 /Polycarbonate
防护罩/Protective Cover	AF1000~2000(无/No)　AF3000-5000(有/Available)

*还有5、50μm可供选择。/*5,50μm are available
还有PE材料滤芯可供选择/PE material filter element is available.

型号 /Model	注1）自动排水型号/ AutoDrainModel	规格/ Specifications				配件 / Accessories	放水器功能/ Drain Function
		注2)额定流量 /Note 2) RatedFlow(L/min)	注3)接管口径 /Note 3) Port Size(G)	杯容量(cm³) /Bowl Capacity	重量 /Weight (kg)	托架 /Bracket	
AF1000-M5	无/NO	110	M5	4	0.07	-	手动排水 /Manual Drain
AF1500-M5		200	M5	4	0.046	-	
AF1500-01			1/8				
AF2000-01	AF2000-01D	750	1/8	15	0.19	B240	
AF2000-02	AF20 00-02D		1/4				
AF3000-02	AF3000-02D	1500	1/4	20	0.29	B340	a.停气排水 /Air Shutoff Drain b.手动排水 /Manual Drain
AF3000-03	AF3000-03D		3/8				
AF4000-03	AF4000-03D	4000	3/8	45	0.55	B440	
AF4000-04	AF4000-04D		1/2				
AF4000-06	AF4000-06D	6000	3/4	45	0.58	B540	
AF5000-06	AF5000-06D	7000	3/4	130	1.08	B640	
AF5000-10	AF5000-10D		1				

注1) AF2000有两种自动排水结构可选，脉冲式自动排水器为常规选型，还有杠杆式自动排水器可选，订货时用“D2”表示；如：AF2000-02D2；
AF3000~AF5000自动排水器结构以杠杆式为常规选型，还有浮球式自动排水器可选，详细说明请参阅自动排水器介绍。
注2) 供应压力为0.7MPa(7.1kgf/cm²) 的情况下。
注3) 接管口径另有Rc、NPT螺纹可供选择。

Note 1) There are 2 types auto drain for AF2000, pulsed type and lever type."D"means normal auto drain, pulsed type;"D2"means lever type auto drain. For Example: AF2000-02D2.
The normal auto drain for AF3000-AF5000 is lever type, but the float type auto drain is available for choose. Please check the details from AUTO DRAIN in page 86~87.
Note 2) The inlet pressure is 0.7MPa(7.1 kgf/cm²)
Note 3) Rc ,NPT thread are available.

结构简图/零件表 Structural Diagram/ List of Components

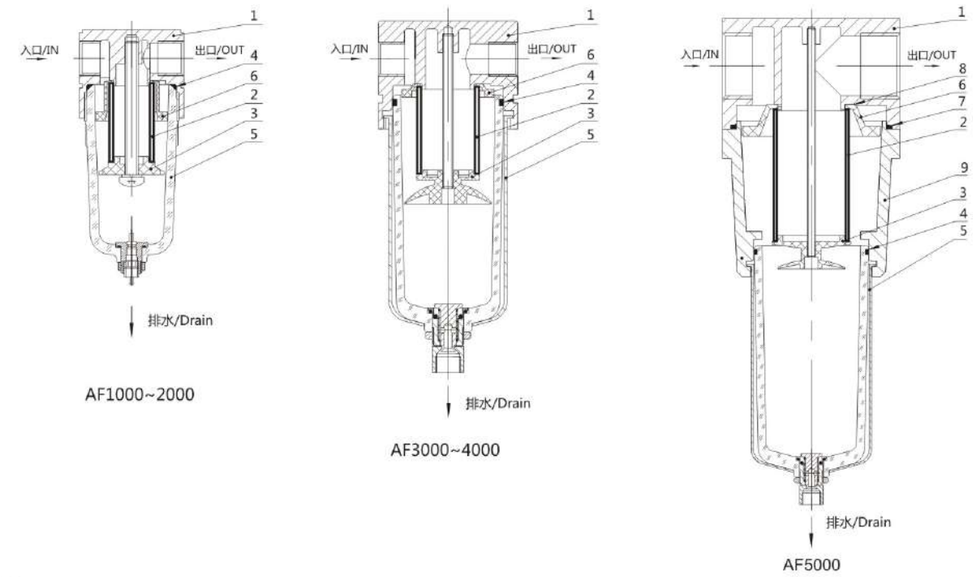

主零件/Main Parts

序号/No.	名称/Denomination	材料/Material
1	阀体/Valve Body	铝压铸件/ Aluminum Die Casting
2	滤芯/Filter Element	铜/Brass
3	淌水板/Drain Board	ABS
4	O形圈/O-ring	橡胶/Rubber
5	存水杯(防护罩)/Water Storage Cup(Protective cover)	聚碳酸酯(冷轧板) /Polycarbonate(Cold Rolled sheet)
6	旋风叶片/ Whirlwind Blade	ABS
7	O形圈/O-ring	橡胶/Rubber
8	中间体/Middle Part	铝压铸件/Aluminum Die Casting

外形尺寸图/Overall Dimension Drawing(mm)

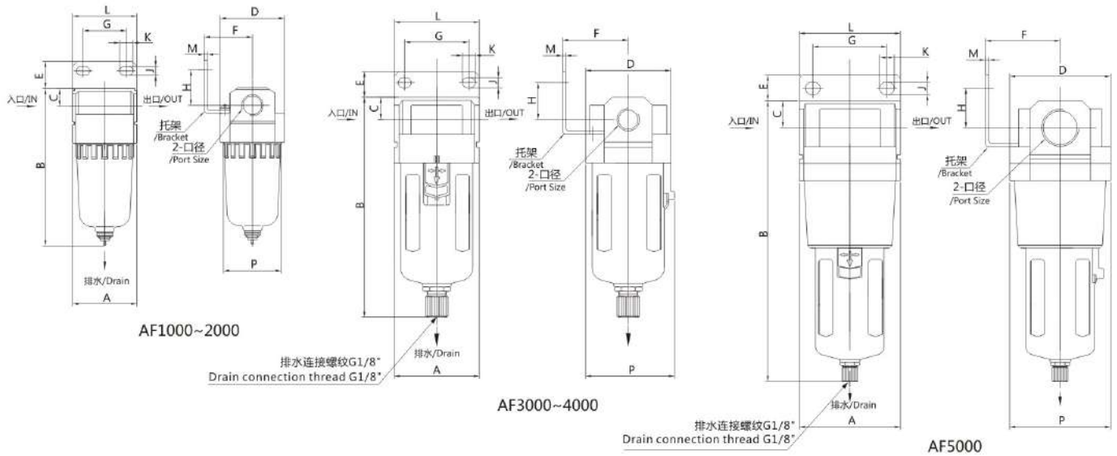

尺寸表/Dimension Sheet (mm)

型号/Model	口径/Port Size(G)	A	B	C	D	E	F	G	H	J	K	L	M	P	B (带自动排水器)/B(With Auto drain)	
AF1000	M5	25	72	7	25	-	-	-	-	-	-	-	-	27.4	无/NO	
AF1500	M5 , 1/8	31	74	7.5	29	-	-	-	-	-	-	-	-	29	无/NO	
AF2000	1/8~1/4	40	97.5	11	40	17	30	27	22	5.4	8.4	40	2.3	40	119	*134
AF3000	1/4~3/8	53	132.5	14	53	16	41	40	23	6.5	8	53	2.3	56	148	
AF4000	3/8~1/2	70	168.5	18	70	17	50	54	26	8.5	10.5	70	2.3	73	173	
AF4000-06	3/4	75	172.5	20	70	14	50	54	25	8.5	10.5	70	2.3	73	177	
AF5000	3/4~1	90	247.5	24	90	23	66.5	66	35	11	13	90	3.2	90	252	

* 标注标尺寸为杠杆式自动放水器高度尺寸。
* This size is for lever type auto drain.

流量特性曲线/Characteristic Curve of Flow Rate

AF1000 M5×0.8

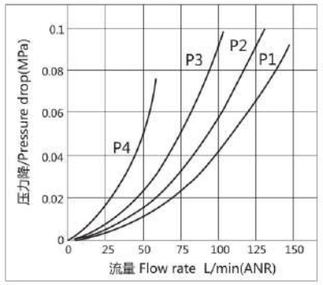

AF2000 1/8-1/4

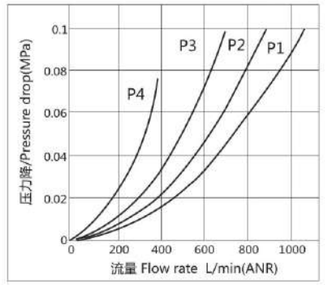

AF3000 1/4-3/8

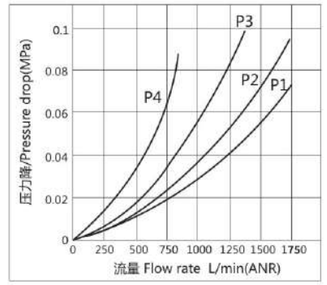

AF4000 3/8-1/2

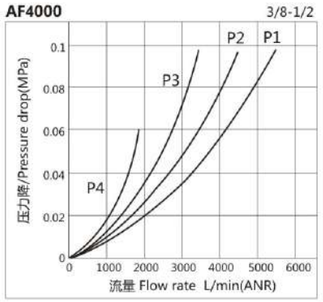

AF4000-06 3/4

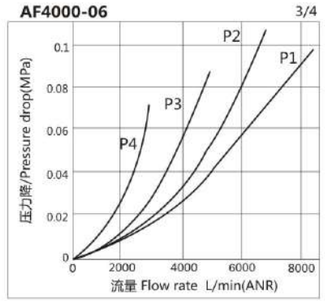

AF5000 3/4-1

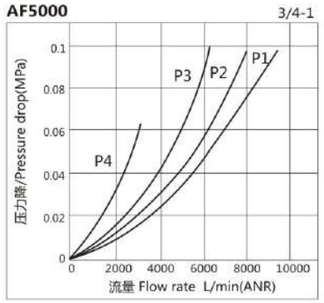

注/Note：P1=0.7MPa P2=0.5MPa P3=0.3MPa P4=0.1MPa

A系列减压阀/A Series Air Regulator AR1000~5000系列/Series

符号/Symbol

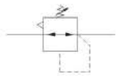

规格/Specification

保证耐压力/Ensured Pressure Resistance	1. 5MPa(15kgf/cm²)
最高使用压力/Highest Working Pressure	1.0MPa(10kgf/cm²)
环境及流体温度/Ambient and Fluid Temperature	5~60℃
调压范围/Pressure Regulating Range	AR1000-1500: 0.05~0.7MPa(0.5~7kgf/cm²) AR2000~5000: 0.05-0.85MPa(0.5-8.5kgf/cm²)
阀型/Valve Type	带溢流型/ Wlith Overflow

* 还有调压范围0.05~0.2MPA(0.5~2kgf/cm²)
* Pressure range 0.05~0.2MPa (0.5~2kgf/cm²) is available.

型号 /Model	规格/ Specifications				配件 /Accessories	
	注1)额定流量 /Note1) Rated Flow(L/min)	注2)接管口径 /Note 2)Port Size (G)	压力表口径 /Pressure Gauge Port	重量 /Weight (kg)	托架 /Bracket	压力表 /Pressure Gauge
AR1000-M5	100	M5	1/16	0.08	B120	G27-10-R1
AR1500-M5	200	M5	1/8	0.052	B120	G36-10-01
AR1500-01		1/8				
AR2000-01	550	1/8	1/8	0.27	B220	G36-10-01
AR2000-02		1/4				
AR2500-02	2000	1/4	1/8	0.27	B220	G36-10-01
AR2500-03		3/8				
AR3000-02	2500	1/4	1/8	0.41	B320	
AR3000-03		3/8				
AR4000-03	6000	3/8	1/4	0.84	B420	G46-10-02
AR4000-04		1/2				
AR4000-06	6000	3/4	1/4	0.94		
AR5000-06	8000	3/4	1/4	1.19		
AR5000-10		1				

注1)供应压力为07MPa(7.1 kgf/cm²)设定压力为0.5MPa(5.1 kgf/cm²)的情况下。
注2)接管口径另有Rc、NPT螺纹可供选择.
Note 1)Under the circumstance that the supply pressure is 0.7MPa(7.1kgf/cm²)and set pressure is 0.5MPa(5.1kgf/cm²)
Note2) Rc and NPT thread are available.

结构简图/零件表 Structural Diagram/ List of Components

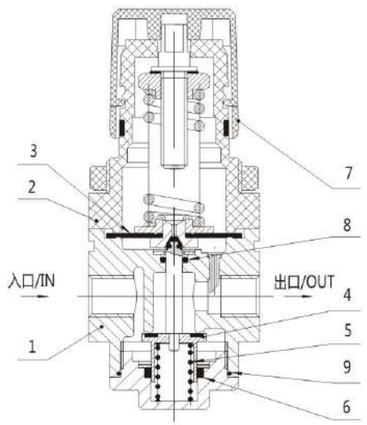

主零件/ Main Parts

AR1000-5000

序号 /No.	名称/ Denomination	材料/ Material		
		AR1000	AR2000-3000	AR4000-5000
1	阀体/Valve Body	锌压铸件/Zinc Die Casting	铝压铸件/Aluminum Die Casting	
2	阀盖/Valve Cover	增强尼龙/ Reinforced Nylon		铝压铸件/Aluminum Die Casting
3	膜片/Film	橡胶/Rubber		
4	阀芯/Valve Core	黄铜、橡胶/Brass, Rubber		
5	弹簧/Spring	不锈钢/Stainless Steel		
6	O形圈/O-ring	橡胶/Rubber		
7	手轮/Hand Wheel	增强尼龙/Reinforced Nylon		
8	O形圈/O-ring	橡胶/Rubber		
9	O形圈/O-ring	橡胶/Rubber		

外形尺寸图/Overall Dimension Drawing(mm)

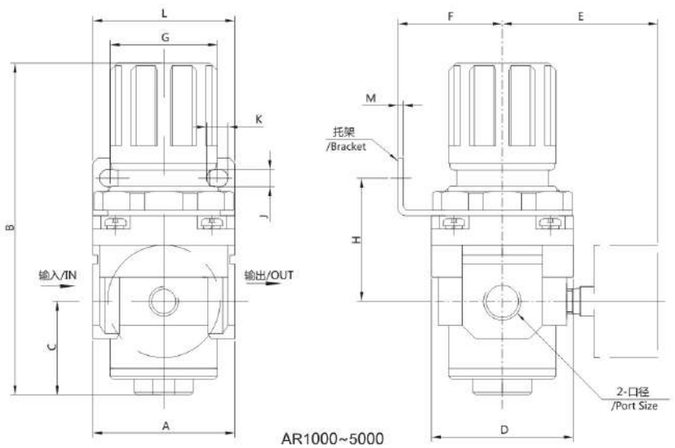

面板切削孔
Panel Cut Hole

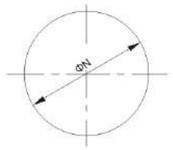

AR1000~3000:
最大厚度/Max thickness 3.5

AR4000~5000:
最大厚度/Max thickness 5

尺寸表/Dimension Sheet (mm)

型号/Model	口径/Port Size(G)	A	B	C	D	E	F	G	H	J	K	L	M	N
AR1000	M5	25	61.5	11	25	26	25	28	30	4.5	6.5	40	2	20.5
AR1500	M5 , 1/8	31	62	13	29	47	25	28	31	4.5	6.4	40	2	20.5
AR2000	1/8~1/4	40	95	17	40	56.8	30	34	44	5.4	15.4	55	2.3	33.5
AR2500	1/4~3/8	53	102.5	25	48	60.8	30	34	44	5.4	15.4	55	2.3	33.5
AR3000	1/4~3/8	53	127.5	35	53	60.8	39	40	46	6.5	8	53	2.3	42.5
AR4000	3/8~1/2	70	149.5	37.5	70	65.5	49.2	54	54	8.5	10.5	70	2.3	52.5
AR4000-06	3/4	75	154	40.5	70	69.5	49.2	54	55.5	8.5	10.5	70	2.3	52.5
AR5000	3/4~1	90	168	48	90	75.5	49.2	54	62	8.5	10.5	70	2.3	52.5

流量特性曲线/Characteristic Curve of Flow Rate

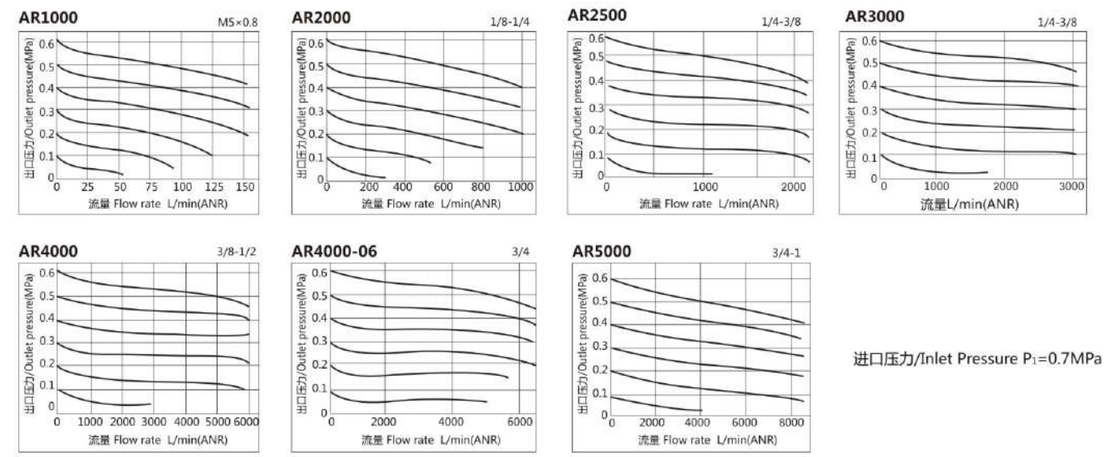

进口压力/Inlet Pressure P_1=0.7MPa

压力特性曲线/Characteristic Curve of Pressure

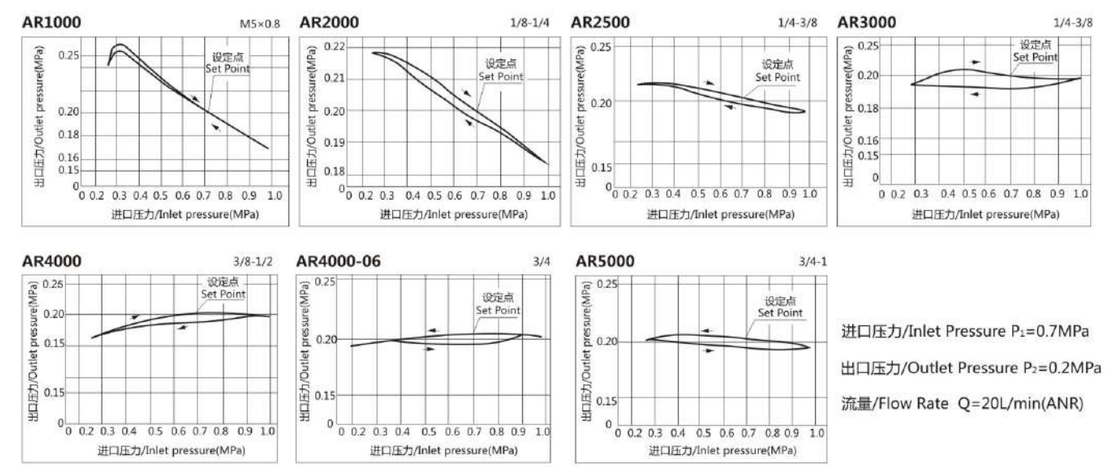

进口压力/Inlet Pressure P_1=0.7MPa

出口压力/Outlet Pressure P_2=0.2MPa

流量/Flow Rate Q=20L/min(ANR)

A系列油雾器/A Series Air Lubricator
AL1000~5000系列/Series

符号/Symbol

规格/Specification

保证耐压力/Ensured Pressure Resistance	1.5MPa(15kgf/cm²)
最高使用压力/Highest Working Pressure	1.0MPa(10kgf/cm²)
环境及流体温度/Ambient and Fluid Temperature	5~60℃
建议用油/Recommended Oil Use	透平1号油/ Turbine No.1 Oil ISOVG32
容器材料/Container Material	聚碳酸酯 /Polycarbonate
防护罩/Protective Cover	AL1000~2000(无/Not Available) AL3000~5000(有/Available)

型号 /Model	规格/Specifications					配件/Accessories
	注1)油滴最小流量 /Minimum Flow of Oil Drop(L/min)	注2)额定流量 /Rated Flow (L/min)	注3)接管口径 /Port Size (G)	杯容量(cm³) /Bowl Capacity	重量 /Weight (kg)	托架 /Bracket
AL1000-M5	4	95	M5	7	0.07	-
AL1500-M5	4	200	M5	7	0.048	-
AL1500-01			1/8			
AL2000-01	15	800	1/8	25	0.22	B240
AL2000-02			1/4			
AL3000-02	30	1700	1/4	50	0.30	B340
AL3000-03	40		3/8			
AL4000-03	40	5000	3/8	130	0.56	B440
AL4000-04	50		1/2			
AL4000-06	50	6300	3/4	130	0.58	B540
AL5000-06	190	7000	3/4	130	1.08	B640
AL5000-10			1			

注1) 供应压力为0.5MPa(5.1kgf/cm²)，油滴流量为5滴/分钟，透平1号油(SOVG32)温度20℃情况下。
注2) 供应压力为0.5MPa(5.1 kgf/cm)，压降为0.03MPa(0.3 kgf/cm²)情况下。
注3) 接管口径另有Rc、NPT，螺纹可供选择。
Note 1) Under the circumstance that the supply pressure is 0. 5MPa(5. 1kgf/cm²), oil drop flow is 5 drops/minute, use of Turbine No. 1 Oil (SOVG32) and 20℃ temperaure.
Note 2) Under the circumstance that the supply pressure is 0.5MPA(5.1kgf/cm²)and pressute drop is 0. 03MPa(0. 3kgf/cm²).
Note 3) Rc and NPT thread are available.

结构简图/零件表 Structural Diagram/ List of Components

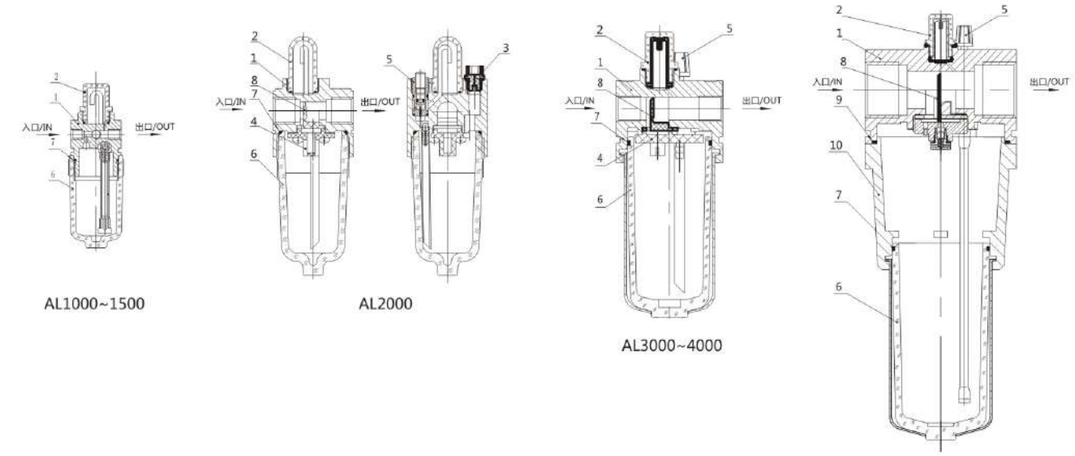

AL1000~1500 AL2000 AL3000~4000 AL5000

主零件/Main Parts

序号 /No.	名称/Denomination	材料/Material		
		AL1000	AL2000-4000	AL5000
1	阀体/Valve Body	锌压铸件/ Zinc Die Casting	铝压铸件/ Aluminum Die Casting	
2	油窗/Oil Window	聚碳酸酯/ Polycarbonate		
3	加油螺塞/Oil Feed Plug	ABS		
4	导向挡板/Guide Retainer	ABS		
5	调油手柄/Oil Adjusting Handle	ABS		
6	油杯(防护罩)/Oil cup(Protective Cover)	聚碳酸酯(冷轧板)/Polycarbonate(Cold Rolled Sheet)		
7	O形圈/O-ring	橡胶/Rubber		
8	挡板/Retainer	聚胺酯/Polyurethane		
9	O形圈/O-ring	橡胶/Rubber		
10	中间体/Middle part	铝压铸件 Aluminum Die Casting		

外形尺寸图/Overall Dimension Drawing(mm)

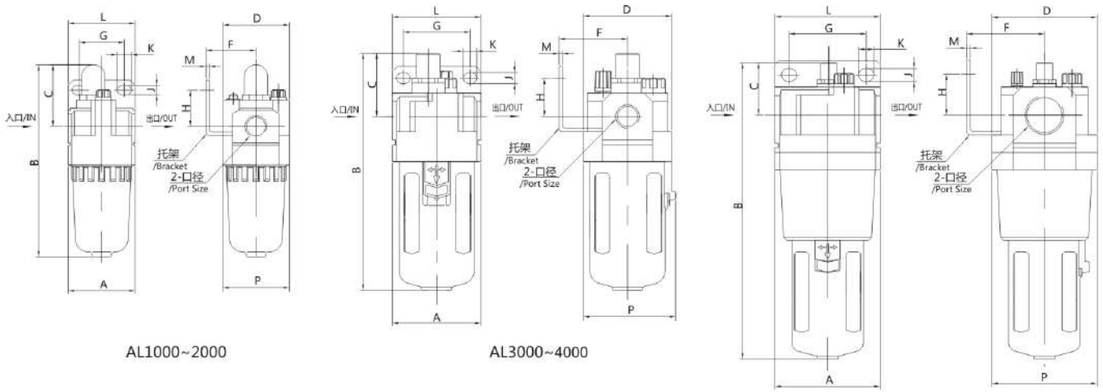

AL1000~2000 AL3000~4000 AL5000

尺寸表/Dimension Sheet (mm)

型号/Model	口径/Port Size(G)	A	B	C	D	F	G	H	J	K	L	M	P
AL1000	M5	25	81.5	25.5	25	–	–	–	–	–	–	–	27
AL1500	M5~1/8	31	83.5	26	29	–	–	–	–	–	–	–	29
AL2000	1/8~1/4	40	118	38	40	30	27	22	5.4	8.4	40	2.3	40
AL3000	1/4~3/8	53	142	38	53	41	40	23	6.5	8	53	2.3	56
AL4000	3/8~1/2	70	177	41	70	50	54	26	8.5	10.5	70	2.3	73
AL4000-06	3/4	75	177	39	70	50	54	25	8.5	10.5	70	2.3	73
AL5000	3/4~1	90	254	45	90	66.5	66	35	11	13	90	3.2	90

流量特性曲线/Characteristic Curve of Flow Rate

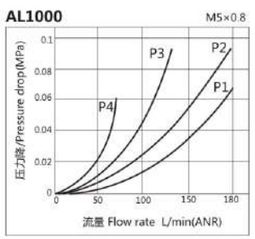

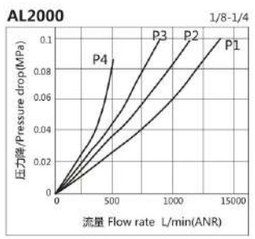

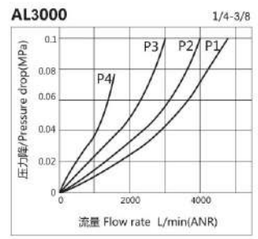

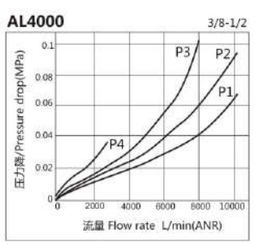

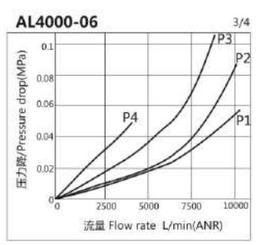

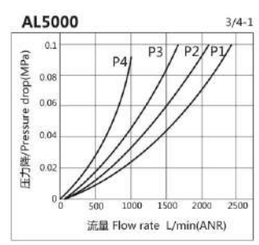

注：P1=0.7MPa　P2=0.5MPa　P3=0.3MPa　P4=0.1MPa

A系列过滤减压阀/A Series Filter Regulator AW1000~5000系列/Series

符号/Symbol

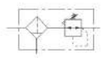

规格/Specification

保证耐压力/Ensured Pressure Resistance	1. 5MPa(15kgf/cm²)
最高使用压力/Highest Working Pressure	1.0MPa(10kgf/cm²)
环境及流体温度/Ambient and Fluid Temperature	5~60℃
*过滤精度/Filter Precision	25μm
容器材料/Container Material	聚碳酸酯 /Polycarbonate
防护罩/Protective Cover	AW1000~2000(无/Not Available) AW3000~5000(有/Available)
调压范围/Pressure Regulating Range	AW1000-1500: 0.05~0.7MPa(0.5~7kgf/cm²) AW2000~5000: 0.05~8.5MPa (0.5~8.5kgf/cm²)
阀型/Valve Type	带溢流型/With Overflow

*还有5、50μm可供选择。/ *5,50μm are available

型号/Model	注1）自动排水型号/Note 1)AutoDrain Model	规格/Specifications				配件 /Accessories		放水器功能/Drain Function
		注2)额定流量/Note 2)Rated Flow(L/min)	注3)接管口径/Note 3) Port Size(G)	压力表口径/Pressure Gauge Port	重量/Weight (kg)	托架/Bracket	压力表/Pressure Gauge	
AW1000-M5	无/NO	100	M5	1/16	0.09	B120	G27-10-R1	手动排水/Manual Drain
AW1500-M5		200	M5	1/8	0.084	B120	G36-10-01	
AW1500-01			1/8					
AW2000-01	AW2000-01D	550	1/8	1/8	0.36	B220	G36-10-01	
AW2000-02	AW2000-02D		1/4					
AW3000-02	AW3000-02D	2000	1/4	1/8	0.56	B320		a.停气排水/Air Shutoff Drain b.手动排水/Manual Drain
AW3000-03	AW3000-03D		3/8					
AW4000-03	AW4000-03D	4000	3/8	1/4	1.15	B420	G46-10-02	
AW4000-04	AW4000-04D		1/2					
AW4000-06	AW4000-06D	4500	3/4	1/4	1.21			
AW5000-06	AW5000-06D	5500	3/4	1/4	1.70			
AW5000-10	AW5000-10D		1					

注1) AW2000有两种自动排水结构可选，脉冲式自动排水器为常规选型，还有杠杆式自动排水器可选，订货时用“D2”表示；AW2000-02D2；
AW3000~AW5000自动排水器结构以杠杆式为常规选型，还有浮球式自动自动排水器可选,详细说明请参阅自动排水器介绍。
注2) 供应压力为0.7MPa(7.1kgf/cm²) 设定压力为0.5MPa(5.1kgf/cm²)的情况下。
注3) 接管口径另有Rc、NPT螺纹可供选择。

Note 1) There are 2 types auto drain for AW2000, pulsed type and lever type."D"means normal auto drain, pulsed type"D2"means lever type auto drain. For Example: AW2000-02D2.
The normal auto drain for AW3000-AW5000 is lever type, but the float type auto drain is available for choose. Please check the details from AUTO DRAIN in page 86~87.
Note 2) Under the circumstance that the supply pressure is 0.7 MPa (7.1 kgf / cm²) and the set pressure is 0.5 MPa (5.1 kgf/cm²).
Note 3) Rc ,NPT thread are available

结构简图/零件表 Structural Diagram/ List of Components

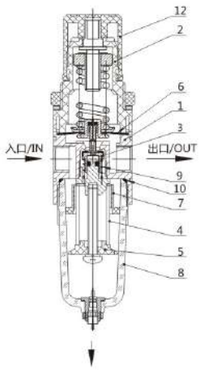

AW1000~2000

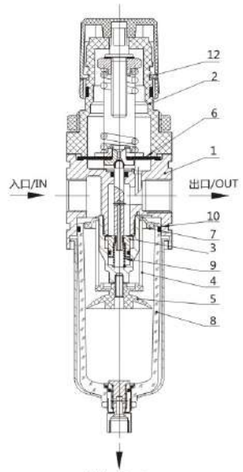

AW3000~4000

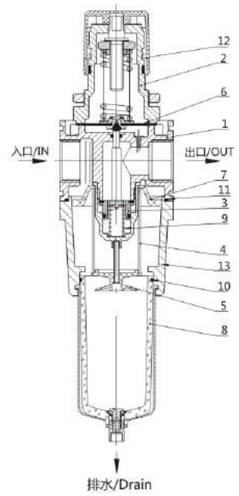

AW5000

主零件/Main Parts

序号/No.	名称/Denomination	材料/Material		
		AW1000	AW2000-3000	AW4000-5000
1	阀体/Valve Body	锌压铸件/Zinc Die Casting	铝压铸件/Aluminum Die Casting	
2	阀盖/Valve Cover	增强尼龙/Reinforced Nylon		铝压铸件/Aluminum Die Casting
3	阀芯组件/Valve Core Assembly	黄铜，橡胶/Brass，Rubber		
4	滤芯/Filter Element	黄铜/Brass		
5	消水板/Drain Board	ABS		
6	膜片/Film	橡胶/Rubber		
7	旋风叶片/Whirlwind Blade	ABS		
8	存水杯(防护罩)/Water Storage Cup(Protective cover)	聚碳酸酯(冷轧板)/ Polycarbonate(Cold Rolled sheet)		
9	弹簧/Spring	不锈钢/Stainless Steel		
10	O形圈/O-ring	橡胶/Rubber		
11	O形圈/O-ring	橡胶/Rubber		
12	手轮/Hand Wheel	增强尼龙/Reinforced Nylon		
13	中间体/Middle Part	铝压铸件/Aluminum Die Casting		

外形尺寸图/Overall Dimension Drawing(mm)

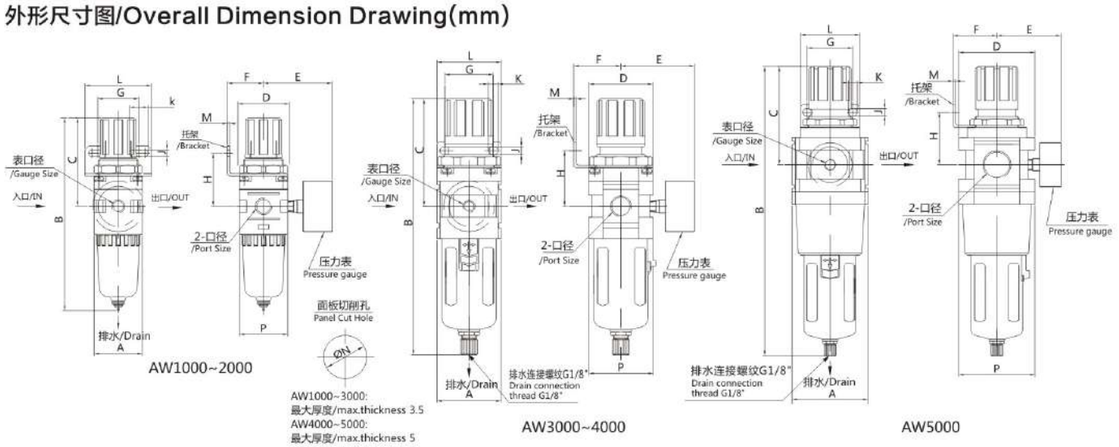

尺寸表/Dimension Sheet (mm)

型号/Model	口径/Port Size(G)	A	B	C	D	E	F	G	H	J	K	L	M	N	P	B (带自动排水器)/B(With Auto drain)	
AW1000	M5	25	113	50.5	25	26	25	28	30	4.5	6.5	40	2	20.5	28	无/NO	
AW1500	M5~1/8	31	117	51	29	47	25	28	33	4.5	6.5	40	2	20.5	29	无/NO	
AW2000	1/8~1/4	40	158	78	40	56.8	30	34	43.5	5.4	15.4	55	2.3	33.5	40	182	*197
AW3000	1/4~3/8	53	208	92.5	53	60.8	39	40	46	6.5	8	53	2.3	42.5	56	223	
AW4000	1/4~3/8	70	256	112	70	70.5	49.2	54	53.5	8.5	10.5	70	2.3	52.5	73	262	
AW4000-06	3/4	75	261	114	70	70.5	49.2	54	55.5	8.5	10.5	70	2.3	52.5	73	266	
AW5000	3/4~1	90	338	116	90	75.5	49.2	54	62	8.5	10.5	70	2.3	52.5	90	343	

*标注标尺寸为杠杆式自动放水器高度尺寸。*This size is for lever type auto drain.

流量特性曲线/Characteristic Curve of Flow Rate

AW1000 M5×0.8

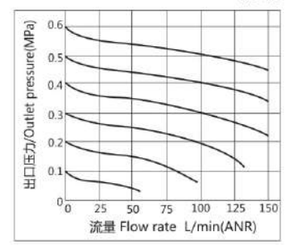

AW2000 1/8-1/4

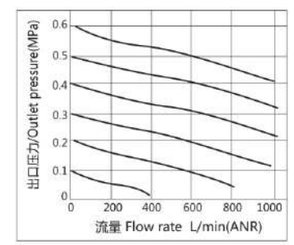

AW3000 1/4-3/8

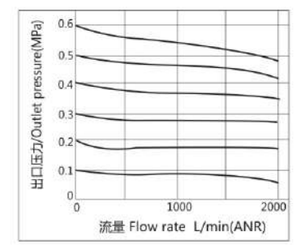

AW4000 3/8-1/2

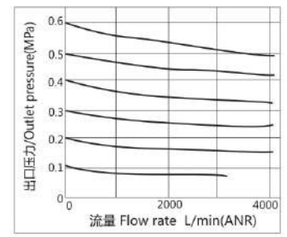

AW4000-06 3/4

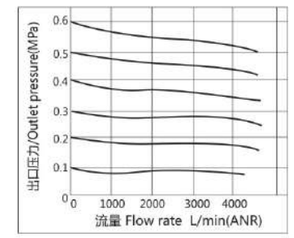

进口压力/Inlet Pressure P_1=0.7MPa

压力特性曲线/Characteristic Curve of Pressure

AW1000 M5×0.8

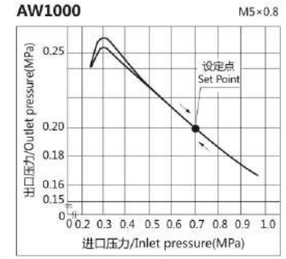

AW2000 1/8-1/4

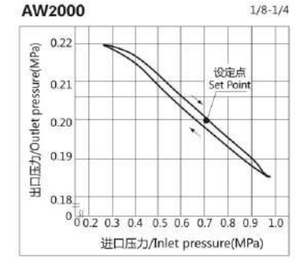

AW3000 1/4-3/8

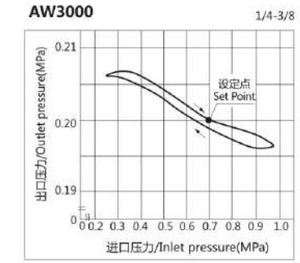

AW4000 3/8-1/2

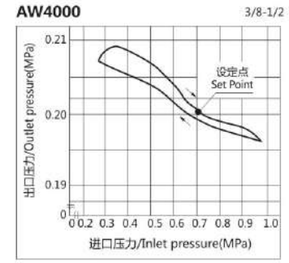

AW4000-06 3/4

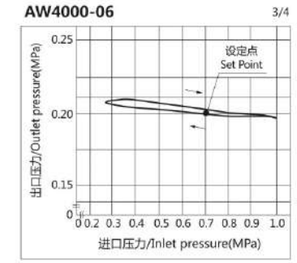

进口压力/Inlet Pressure P_1=0.7Mpa

出口压力/Outlet Pressure P_2=0.2Mpa

流量/Flow Rate Q=20L/min(ANR)

HA系列气源处理组合元件(三联件)/HA Series Combination Unit(F+R+L)
HAC2000~5000系列/Series

符号/Symbol

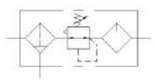

特性/Features

此款产品在过滤器放水装置处安装一快插接头，用户可以在此处接入塑料管，将过滤器产生的污水排放到指定位置，起到保护现场环境的作用。

This product features a one-touch fitting at the filter drain, where the user can insert a plastic tube and discharge the filter waste water to a designated location to protect the site environment.

规格/Specification

保证耐压力/Ensured Pressure Resistance	1. 5MPa(15kgf/cm²)
最高使用压力/Highest Working Pressure	1.0MPa(10kgf/cm²)
环境及流体温/Ambient and Fluid Temperature	5~60℃
*过滤精度/Filter Precision	25μm
建议用油/Recommended Oil Use	透平1号油 /Turbine No.1 Oil ISOVG32
容器材料/Container Material	聚碳酸酯/Polycarbonate
防护罩/Protective Cover	有/Available
调压范围/Pressure Regulating Range	0.05~0.85MPa(0.5~8.5kgf/cm²)
阀型/Valve Type	带溢流型/Wlith Overflow

*还有5、50μm可供选择。/ 5,50μm are available

型号/Model		规格/Specifications							配件/Accessories	
		组件/Assembiy			注2)额定流量 /Note 2)Rated Flow (L/min)	注3)接管口径 /Note 3)Port Size (G)	压力表口径 /Pressure Gauge Port	重量 /Weight (kg)	托架 /Bracket	压力表 /Pressure Gauge
手动放水型/ Manual drain	注1)自动排水型/ Note 1) Auto drain	过滤器 /Filter	减压阀 /Regulator	油雾器 /Lubricator						
HAC2000-01	无/NO	HAF2000	HAR2000	HAL2000	500	1/8	1/8	0.74	Y20L	G36-10-01
HAC2000-02						1/4				
HAC2500-02	HAC2500-02D	HAF3000	HAR2500	HAL3000	1500	1/4	1/8	1.04	Y30L	
HAC2500-03	HAC2500-03D					3/8				
HAC3000-02	HAC3000-02D	HAF3000	HAR3000	HAL3000	2000	1/4	1/8	1.18	Y30L	
HAC3000-03	HAC3000-03D					3/8				
HAC4000-03	HAC4000-03D	HAF4000	HAR4000	HAL4000	4000	3/8	1/4	2.14	Y40L	G46-10-02
HAC4000-04	HAC4000-04D					1/2				
HAC4000-06	HAC4000-06D	HAF4000-06	HAR4000-06	HAL4000-06	4500	3/4	1/4	2.47	Y50L	
HAC5000-06	HAC5000-06D	HAF5000	HAR5000	HAL5000	5000	3/4	1/4	3.82	Y60L	
HAC5000-10	HAC5000-10D					1				

注1) HAC2000无自动排水可选；HAC2500-HAC5000自动排水器结构以杠杆式为常规选型，还有浮球式自动自动排水器可选，详细说明请参阅自动排水器介绍。
注2) 供应压力为0.7MPa(7.1kgf/cm²)设定压力为0.5MPa(5.1 kgf/cm²)的情况下。
注3) 接管口径另有Rc、NPT螺纹可供选择。
Note 1) HAC2000 is not available for auto drain. The normal auto drain for HAC2500-HAC5000 is lever type, but the float type auto drain is available for choose. Please check the details from AUTO DRAIN in page 86~87.
Note 2) The inlet pressure is 0.7MPa(7.1 kgf/cm²), the set pressure is 0.5MPa(5. 1kgf/cm²).
Note 3) Rc ,NPT thread are available.

HA系列气源处理组合元件(二联件)/HA Series Combination Unit(FR+L)
HAC2010~5010系列/Series

符号/Symbol

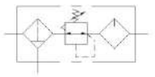

规格/Specification

保证耐压力/Ensured Pressure Resistance	1. 5MPa(15kgf/cm²)
最高使用压力/Highest Working Pressure	1.0MPa(10kgf/cm²)
环境及流体温度/Ambient and Fluid Temperature	5~60℃
*过滤精度/Filter Precision	25μm
建议用油/Recommended Oil Use	透平1号油 /Turbine No1 Oil ISOVG32
容器材料/Container Material	聚碳酸酯 /Polycarbonate
防护罩/Protective Cover	有/Available
调压范围/Pressure Regulating Range	0.05~0.85MPa(0.5~8.5kgf/cm²)
阀型/Valve Type	带溢流型/ Wlith Overflow

*还有5、50μm可供选择。/ 5,50μm are available

型号/Model		规格/Specifications						配件 /Accessories	
		组件/Assembiy		注2)额定流量 /Note 2)Rated Flow (L/min)	注3)接管口径 /Note 3)Port Size (G)	压力表口径 /Pressure Gauge Port	重量 /Weight (kg)	托架 /Bracket	压力表 /Pressure Gauge
手动放水型/ Manual drain	注1)自动排水型/ Note 1) Auto drain	过滤减压阀/ Filter Regulator	油雾器/ Lubricator						
HAC2010-01	无/NO	HAW2000	HAL2000	500	1/8	1/8	0.66	Y20T	G36-10-01
HAC2010-02					1/4				
HAC3010-02	HAC3010-02D	HAW3000	HAL3000	1700	1/4	1/8	0.98	Y30T	
HAC3010-03	HAC3010-03D				3/8				
HAC4010-03	HAC4010-03D	HAW4000	HAL4000	3000	3/8	1/4	1.93	Y40T	G46-10-02
HAC4010-04	HAC4010-04D				1/2				
HAC4010-06	HAC4010-06D	HAW4000-06	HAL4000-06	3000	3/4	1/4	1.99	Y50T	
HAC5010-06	HAC5010-06D	HAW5000	HAL5000	4000	3/4	1/4	3.20	Y60T	
HAC5010-10	HAC5010-10D				1				

注1) HAC2010无自动排水可选；HAC3010-HAC5010自动排水器结构以杠杆式为常规选型，还有浮球式自动自动排水器可选，详细说明请参阅自动排水器介绍。
注2) 供应压力为0.7MPa(7.1kgf/cm²)设定压力为0.5MPa(5.1 kgf/cm²)的情况下。
注3) 接管口径另有Rc、NPT螺纹可供选择。
Note 1) HAC2010 is not available for auto drain. The normal auto drain for HAC3010-HAC5010 is lever type, but the float type auto drain is available for choose. Please check the details from AUTO DRAIN in page 86~87.
Note 2) The inlet pressure is 0.7MPa(7.1 kgf/cm²), the set pressure is 0.5MPa(5. 1kgf/cm²).
Note 3) Rc ,NPT thread are available.

HA系列空气过滤器/HA Series Air Filter
HAF2000~5000系列/Series

规格/Specification

保证耐压力/Ensured Pressure Resistance	1. 5MPa(15kgf/cm²)
最高使用压力/Highest Working Pressure	1.0MPa(10kgf/cm²)
环境及流体温度/Ambient and Fluid Temperature	5~60℃
*过滤精度/*Filter Precision	25μm
滤芯材质/Filter material	铜/Brass
容器材料/Container Material	聚碳酸酯 /Polycarbonate
防护罩/Protective Cover	有/Available

*还有5、50μm可供选择。/*5.50μm are available
还有PE材质滤芯可供选择。/PE material filter element is available.

符号/Symbol

型号/Model		规格/Specifications				配件/Accessories	放水器功能 /Drain Function
手动放水型/ Manual drain	注1)自动排水型/ Note 1) Auto drain	注2)额定流量 /Note 2)Rated Flow (L/min)	注3)接管口径 /Note 3)Port Size (G)	杯容量(cm³) /Bowl Capacity	重量 /Weight (kg)	托架 /Bracket	
HAF2000-01	无/NO	750	1/8	15	0.18	B240	a.停气排水 /Air Shutoff Drain b.手动排水 /Manual Drain
HAF2000-02			1/4				
HAF3000-02	HAF3000-02D	1500	1/4	20	0.26	B340	
HAF3000-03	HAF3000-03D		3/8				
HAF4000-03	HAF4000-03D	4000	3/8	45	0.52	B440	
HAF4000-04	HAF4000-04D		1/2				
HAF4000-06	HAF4000-06D	6000	3/4	45	0.57	B540	
HAF5000-06	HAF5000-06D	7000	3/4	130	1.04	B640	
HAF5000-10	HAF5000-10D		1				

注1) HAF2000无自动排水可选；HAF3000-HAF5000自动排水器结构以杠杆式为常规选型，还有浮球式自动自动排水器可选，详细说明请参阅自动排水器介绍。
注2) 供应压力为0.7MPa(7.1kgf/cm²)设定压力为0.5MPa(5.1 kgf/cm²)的情况下。
注3) 接管口径另有Rc、NPT螺纹可供选择。
Note 1) HAF2000 is not available for auto drain. The normal auto drain for HAF3000-HAF5000 is lever type, but the float type auto drain is available for choose. Please check the details from AUTO DRAIN in page 86~87.
Note 2) The inlet pressure is 0.7MPa(7.1 kgf/cm²), the set pressure is 0.5MPa(5. 1kgf/cm²).
Note 3) Rc ,NPT thread are available.

外形尺寸图/ Overall Dimension Drawing(mm)

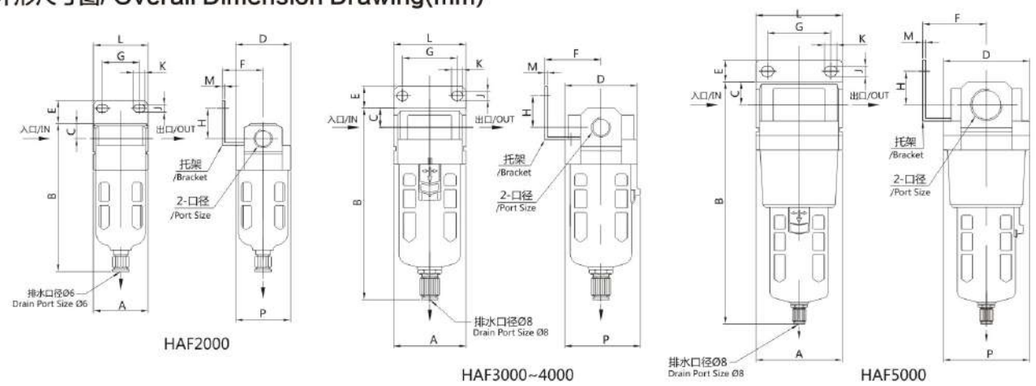

HAF2000　　HAF3000~4000　　HAF5000

型号/Model	口径/Port Size(G)	A	B	C	D	E	F	G	H	J	K	L	M	P	B (带自动排水器) B (With Auto drain)
HAF2000	1/8~1/4	40	113	11	40	17	30	27	23	5.4	8.4	40	2.3	40	无/NO
HAF3000	1/4~3/8	53	139.5	14	53	16	41	40	23	6.5	8	53	2.3	56	148
HAF4000	3/8~1/2	70	175.5	18	70	17	50	54	26	8.5	10.5	70	2.3	73	173
HAF4000-06	3/4	75	179.5	20	70	14	50	54	25	8.5	10.5	70	2.3	73	177
HAF5000	3/4~1	90	254.5	24	90	23	66.5	66	35	11	13	90	3.2	90	252

HA系列油雾器/HA Series Air Lubricaor
HAL2000~5000系列/Series

规格/Specification

保证耐压力/Ensured Pressure Resistance	1. 5MPa(15kgf/cm²)
最高使用压力/Highest Working Pressure	1.0MPa(10kgf/cm²)
环境及流体温度 /Ambient and Fluid Temperature	5~60℃
建议用油/Recommended Oil Use	透平1号油 / Turbine No.1 Oil ISOVG32
容器材料/Container Material	聚碳酸酯/Polycarbonate
防护罩/Protective Cover	有/Available

符号/Symbol

型号/Model	规格/Specifications					配件/Accessories
	注1)油滴最小流量 /Minimal Flow of Oil Drop(L/min)	注2)额定流量 /Rated Flow (L/min)	注3)接管口径 /Port Size (G)	杯容量(cm³) /Bowl Caapacity	重量 /Weight (kg)	托架 /Bracket
HAL2000-01	15	800	1/8	25	0.18	B240
HAL2000-02			1/4			
HAL3000-02	30	1700	1/4	50	0.27	B340
HAL3000-03	40		3/8			
HAL4000-03	40	5000	3/8	130	0.5	B440
HAL4000-04	50		1/2			
HAL4000-06	50	6300	3/4	130	0.57	B540
HAL5000-06	190	7000	3/4	130	1.1	B640
HAL5000-10			1			

注1) 供应压力为0.5MPa(5.1kgf/cm²)，油滴流量为5滴/分钟，透平1号油(SOVG32)温度20℃情况下。
注2) 供应压力为0.5MPa(5.1 kgf/cm)，压降为0.03MPa(0.3 kgf/cm²)情况下。
注3) 接管口径另有Rc、NPT，螺纹可供选择。
Note 1) Under the circumstance that the supply pressure is 0. 5MPa(5. 1kgf/cm²), oil drop flow is 5 drops/minute, use of Turbine No. 1 Oil (SOVG32) and 20℃ temperaure.
Note 2) Under the circumstance that the supply pressure is 0.5MPA(5.1kgf/cm²)and pressute drop is 0. 03MPa(0. 3kgf/cm²).
Note 3) Rc and NPT thread are available.

外形尺寸图/ Overall Dimension Drawing(mm)

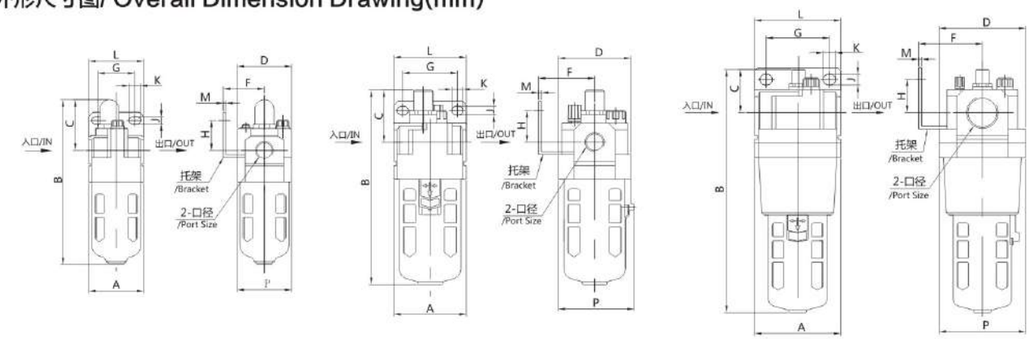

HAL2000　　HAL3000~4000　　HAL5000

型号/Model	口径/Port Size(G)	A	B	C	D	F	G	H	J	K	L	M	P
HAL2000	1/8~1/4	40	121.5	38	40	30	27	22	5.4	8.4	40	2.3	40
HAL3000	1/4~3/8	53	142	38	53	41	40	23	6.5	8	53	2.3	56
HAL4000	3/8~1/2	70	177	41	70	50	54	26	8.5	10.5	70	2.3	73
HAL4000-06	3/4	75	177	39	70	50	54	25	8.5	10.5	70	2.3	73
HAL5000	3/4~1	90	254	45	90	66.5	66	25	11	13	90	3.2	90

HA系列过滤减压阀/HA Series Filter Regulator HAW2000~5000系列/Series

规格/Specification

保证耐压力/Ensured Pressure Resistance	1.5MPa(15kgf/cm²)
最高使用压力/Highest Working Pressure	1.0MPa(10kgf/cm²)
环境及流体温度/Ambient and Fluid Temperature	5~60℃
*过滤精度/*Filter Precision	25μm
容器材料/Container Material	聚碳酸酯/Polycarbonate
防护罩/Protective Cover	有/Available
调压范围/Pressure Regulating Range	0.05~0.85MPa(0.5~8.5kgf/cm²)
阀型/Valve Type	带溢流型/With Overflow

*还有5、50μm可供选择。/*5,50μm are available

符号/Symbol

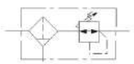

型号/Model		规格/Specifications				配件/Accessories		放水器功能/Drain Function
手动放水型/Manual drain	注1)自动排水型/Note 1) Auto drain	注2)额定流量/Note 2)Rated Flow (L/min)	注3)接管口径/Note 3)Port Size (G)	压力表口径/Pressure Gauge Port	重量/Weight (kg)	托架/Bracket	压力表/Pressure Gauge	
HAW2000-01	无/NO	550	1/8	1/8	0.3	B220	G36-10-01	a.停气排水/Air Shutoff Drain b.手动排水/Manual Drain
HAW2000-02			1/4					
HAW3000-02	HAW3000-03D	2000	1/4	1/8	0.53	B320		
HAW3000-03	HAW3000-03D		3/8					
HAW4000-03	HAW4000-03D	4000	3/8	1/4	1.15	B420	G46-10-02	
HAW4000-04	HAW4000-04D		1/2					
HAW4000-06	HAW4000-06D	4500	3/4	1/4	1.19			
HAW5000-06	HAW5000-06D	5500	3/4	1/4	1.78			
HAW5000-10	HAW5000-10D		1					

注1) HAW2000无自动排水可选；HAW3000-HAW5000自动排水器结构以杠杆式为常规选型，还有浮球式自动自动排水器可选，详细说明请参阅自动排水器介绍。
注2) 供应压力为0.7MPa(7.1kgf/cm²)设定压力为0.5MPa(5.1 kgf/cm²)的情况下。
注3) 接管口径另有Rc、NPT螺纹可供选择。
Note 1) HAW2000 is not available for auto drain. The normal auto drain for HAW3000-HAW5000 is lever type, but the float type auto drain is available for choose. Please check the details from AUTO DRAIN in page 86~87.
Note 2) The inlet pressure is 0.7MPa(7.1 kgf/cm²), the set pressure is 0.5MPa(5. 1kgf/cm²).
Note 3) Rc ,NPT thread are available.

外形尺寸图/Overall Dimension Drawing(mm)

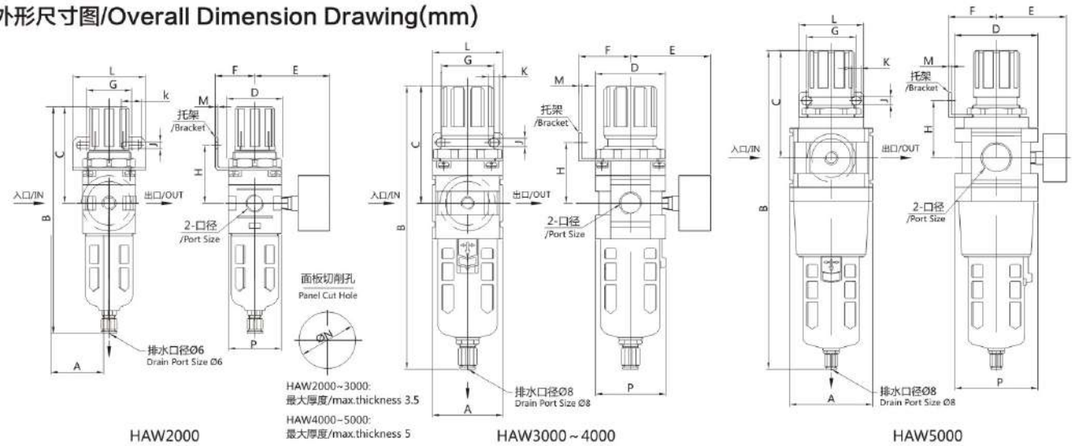

型号/Model	口径/Port Size(G)	A	B	C	D	E	F	G	H	J	K	L	M	P	N	B (带自动排水器) B (With Auto drain)
HAW2000	1/8~1/4	40	180	78	40	56.8	30	34	43.5	5.4	15.4	55	2.3	40	33.5	无/NO
HAW3000	1/4~3/8	53	218	92.5	53	60.8	39	40	46	6.5	8	53	2.3	56	42.5	223
HAW4000	3/8~1-2	70	269.5	112	70	70.5	49.2	54	53.5	8.5	10.5	70	2.3	73	52.5	262
HAW4000-06	3/4	75	273.5	114	70	70.5	49.2	54	55.5	8.5	10.5	70	2.3	73	52.5	266
HAW5000	3/4~1	90	346.5	116	90	75.5	49.2	54	62	8.5	10.5	70	3.2	90	52.5	343

大口径空气过滤器/Large Size Air Filter HAF800~930系列/Series

规格/Specification

保证耐压力/Ensured Pressure Resistance	1. 5MPa(15kgf/cm²)
最高使用压力/Highest Working Pressure	1.0MPa(10kgf/cm²)
环境及流体温度/Ambient and Fluid Temperature	5~60℃
*过滤精度/ *Filter Precision	25μm
滤芯材质/Filter material	铜/Brass
容器材料/Container Material	聚碳酸酯/Polycarbonate
防护罩/Protective Cover	有/Available

*还有5、50μm可供选择。/*5,50μm are available

符号/Symbol

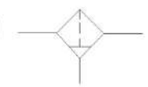

型号 Model	自动排水型号/Auto Drain Model	规格/ Specifications				放水器功能/Drain Function
		*额定流量/Rated Flow (L/min)	**接管口径/Port Size (G)	杯容量(cm³)/Bowl Capacity	重量/Weight (kg)	
HAF800-12	HAF800-12D	11500	1 ¼	180	3.08	a.停气排水/Air Shutoff Drain b.手动排水/Manual Drain
HAF800-14	HAF800-14D	11500	1 ½	180	3.08	
HAF900-20	HAF900-20D	18500	2	180	5.16	
HAF930-30	HAF930-30D	25000	3	180	12	

*供应压力为0.7MPa(7.1kgf/cm²)降压为0.05MPa(0.5kgf/cm²)的情况下。
*Under the circumstance that the supply pressure is 0.7MPa(7.1 kgf/cm²)and the pressure drop is 0.05MPa(0.5 kgf/cm²).
接管口径另有Rc、NPT螺纹可供选择。Rc and NPT thrad are available.

结构简图/零件表 Structural Diagram/ List of Components

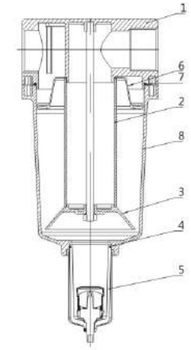

主零件/ Main Parts

序号/No.	名称/Denomination	材料/Material
1	阀体/Valve Body	铝压铸件/ Aluminum Die Casting
2	滤芯 /Filter	黄铜/Brass
3	淌水板 /Drain Board	铝压铸件/ Aluminum Die Casting
4	O形圈/O-ring	橡胶/ Rubber
5	存水杯(防护罩)/ Water Storage Cup(Protective cover)	聚碳酸酯(冷轧板)/ Polycarbonate(Cold Rolled sheet)
6	旋风叶片/Whirlwind Blade	铝合金/Aluminum alloy
7	O形圈/O-ring	橡胶/Rubber
8	中间体/Middle Part	铝压铸件/Aluminum Die Casting

外形尺寸图/Overall Dimension Drawing(mm)

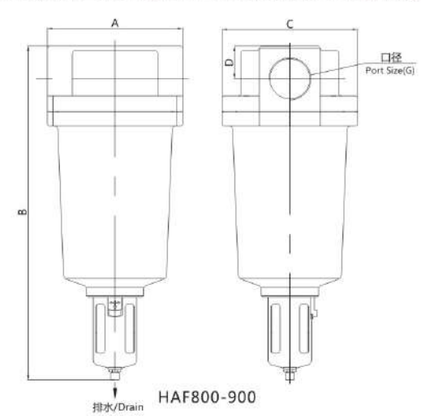

HAF800-900

尺寸表/Dimension Sheet (mm)

型号/Model	口径/Port Size(G)	A	B	C	D	B (带自动排水器) B (With Auto drain)
HAF800-12/14	1¼, 1½	150	390	140	33	394.5
HAF900-20	2	190	470	190	46	474.5
HAF930-30	3	205	765	181	65	761

大口径减压阀/Large Size Regulator HAR825~925系列/Series

规格/Specification

保证耐压力/Ensured Pressure Resistance	1. 5MPa(15kgf/cm²)
最高使用压力/Highest Working Pressure	1.0MPa(10kgf/cm²)
环境及流体温度/Ambient and Fluid Temperature	5~60℃
调压范围/Pressure Regulating Range	0.05~0.85MPa(0.5~8.5kgf/cm²)
阀型/Valve Type	带溢流型/With Overflow

型号 Model	规格/ Specifications				配件 /Accessories	
	*额定流量 /Rated Flow (L/min)	**接管口径 /Rort Size (G)	压力表口径 /Pressure Gauge Port	重量 /Weight (kg)	托架 /Bracket	压力表 /Pressure Gauge
HAR825-14	18000	1½	1/4	2.5	无	G46-10-02
HAR925-20	22000	2	1/4	3.1	无	

*供应压力为0.7MPa(7.1kgf/cm²)设定压力为0.5MPa(5.1kgf/c²m)的情况下。
**接管口径另有Rc、NPT螺纹可供选择
*Under the circumstance that the supply pressure is 0.7MPa(7.1 kgf/cm²)and set pressure is 0.5MPa (5.1 kgf/cm²).
** Rc and NPT thread are available.

符号/Symbol

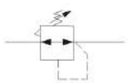

结构简图/零件表 Structural Diagram/ List of Components

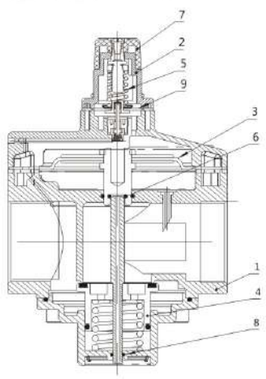

主零件/Main Parts

序号/No.	名称/Denomination	材料/Material
		HAR825~925
1	阀体/Valve Body	铝压铸件/Aluminum Die Casting
2	阀盖/Bonnet	铝压铸件/Aluminum Die Casting
3	膜片/Film	橡胶/Rubber
4	阀芯/Nalve Core Valve	黄铜、橡胶/Brass Rubber
5	弹簧/Spring	不锈钢/Stainless steel
6	O形圈/O-ring	橡胶/Rubber
7	手轮/Hand Wheel	增强尼龙/Reinforced nylon
8	O形圈/O-ring	橡胶/Rubber
9	小膜片/Film	橡胶/Rubber

外形尺寸图/ Overall Dimension Drawing(mm)

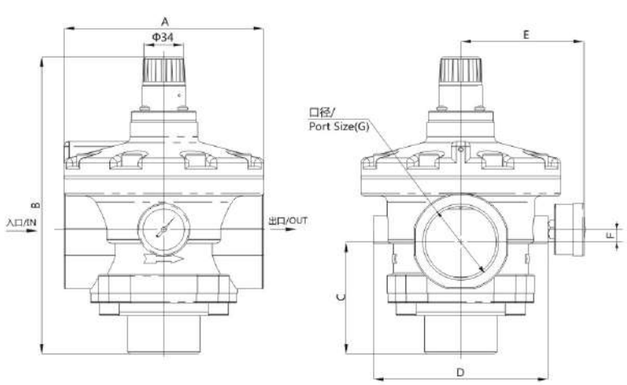

尺寸表/Dimension Sheet (mm)

型号/Model	口径/Port Size(G)	A	B
HAR825	1 ½	Φ126	216
HAR925	2	Φ160	242

型号/Model	C	D	E	F
HAR825	75	110	90.5	5
HAR925	90	140	105.5	10

大流量型油雾器/Large Size Air lubricator HAL900系列/Series

符号/Symbol

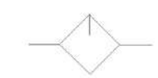

规格/Specification

型号/Model	HAL900-14	HAL900-20
接管口径/Port Size	1½	2
最高使用压力/Highest Working Pressure	1.0MPa	
油滴最小流量L/min/Minimum flow rate of oil drop	1000 L/min	
油杯容量/Bowl Capacity	1600cm³	
建议用油/Recommended Oil Use	透平油1号/Turbine No.1 Oil ISOVG32	
环境及流体温度/Ambient and Fluid Temperature	-5~60℃(未冻结/Not frozen)	
油杯材质/Container Material	聚碳酸酯/Polycarbonate	
附件(保护罩)/Accessories(Protective Cover)	有(Available)	
重量kg/Weight(kg)	3.14	3.33

外形尺寸图/Overall Dimension Drawing(mm)

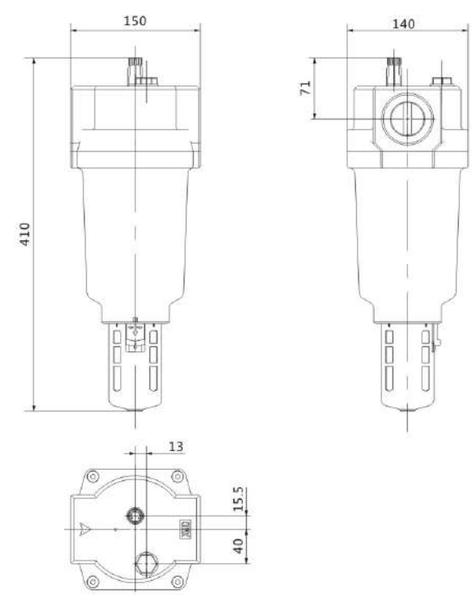

油雾分离器/Mist Separator
HAFM30~930系列/Series



符号/Symbol

型号命名方法/How To Order

HAFM 30 - 03 D - □

HA系列油雾分离器
HA Series Mist Separator

规格 Body Size
30
40
50
800
900
930

接口螺纹 Port Size
02(1/4)
03(3/8)
04(1/2)
06(3/4)
10(1)
12(1 1/4)
14(1 1/2)
20(2)
30(3)

无：标准 No: Standard
D: 自动排水 D: Auto drain

无：HA系列杯体及防护罩 No: HA Series cup & cover
1：A系列杯体及防护罩 A Series cup & cover
3：金属杯体，金属杯B款为3B Metal cup, TYPE B metal cup is 3B.

特性/Features

1. 过滤精度0.3μm，可清除压缩空气中的碳和焦油；The filtration accuracy is 0.3μm, which can remove carbon and tar from compressed air.
2. 有差压式排水和自动排水两种形式可供选择；Differential pressure drain and auto drain are available.
3. 可选择使用固定支架安装。Mounting bracket for installation are available.

规格/Specification

型号/Model	HAFM30	HAFM40	HAFM50	HAFM800	HAFM900	HAFM930
连接口径/Port Size	1/4 , 3/8	3/8 , 1/2 , 3/4	3/4 , 1	1 1/4~1 1/2	2	3
使用流体/Fluid	压缩空气/Compressed air					
环境及流体温度/Ambient and Fluid Temperature	-5~60℃					
保证耐压力/Ensured Pressure Resistance	1.5MPa					
最高使用压力/Highest Working Pressure	1.0MPa					
最低使用压力/Minimum Working-pressure	0.15MPa					
过滤精度/Filter Precision	0.3μm(捕捉效率/Capture efficiency 95%)					
额定流量/Rated Flow (L/min)	800	2000	2500	8000	15000	22000
水杯容量/Bowl Caapacity (CM^3)	20	45	130	130	130	130
杯体材质/Container Material	聚碳酸酯/Polycarbonate					
防护罩/Protective Cover	有/Available					
托架/Bracket	B340	B440/B540	B640	无/No	无/No	无/No
重量/Weight (kg)	0.29	0.52	1.05	3	5	12

外形尺寸图/Overall Dimension Drawing(mm)

HAFM30~40

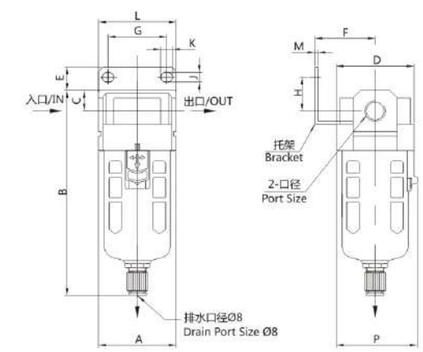

HAFM50

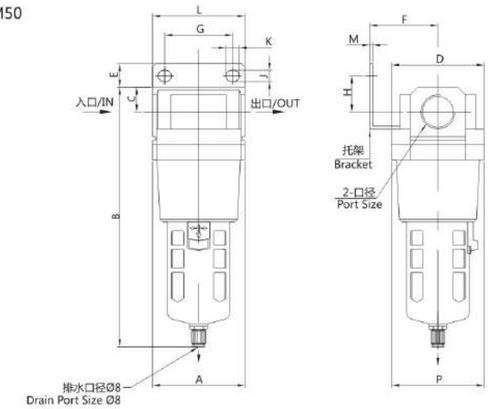

尺寸表/ Dimension Sheet (mm)

型号/Model	口径/Port Size G	A	B	C	D	E	F	G	H	J	K	L	M	P
HAFM30	1/4~3/8	53	139.5	14	53	16	41	40	23	6.5	8	53	2.3	56
HAFM40	3/8~1/2	70	175.5	18	70	17	50	54	26	8.5	10.5	70	2.3	73
HAFM40-06	3/4	75	179.5	20	70	14	50	54	25	8.5	10.5	70	2.3	73
HAFM50	3/4~1	90	254.5	24	90	23	66.5	66	35	11	13	90	3.2	90
HAFM800	1 1/4~1 1/2	150	390	33	140	-	-	-	-	-	-	-	-	-
HAFM900	2	190	470	46	190	-	-	-	-	-	-	-	-	-
HAFM930	3	205	765	65	181	-	-	-	-	-	-	-	-	-

HNA系列气源处理组合元件(三联件)/HNA Series Combination Unit (F+R+L)
HNAC2000~5000系列/Series



符号/Symbol

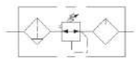

特性/Features

本系列产品的水杯和油杯压铸铝合金制造，与水、油杯为聚碳酸酯材料的常规产品相比，使用范围更广。本产品能在下列环境中使用：受阳光直接照射的环境、有有机溶剂及稀释剂、四氯化碳、氯仿、硝酸、硫酸、苯胺、煤油等化学药品雾气的环境。

The water cup and oil cup of the series products are made of die casting aluminum. Compared with the conventional products of PC material, they can be used in a wider range. This products can be used in the following environments: Direct Sunlight Environment, organic solvents and thinners, tetrachloromethane, chloroform,nitric acid, sulfuric acid, aniline, kerosene and other chemical fog environment.

规格/Specification

保证耐压力/Ensured Pressure Resistance	1.5MPa(15kgf/cm²)
最高使用压力/Highest Working Pressure	1.0MPa(10kgf/cm²)
环境及流体温度/Ambient and Fluid Temperature	5~60℃
*过滤精度/*Filter Precision	25μm
建议用油/Recommended Oil Use	透平1号油 /Turbine No.1 Oil ISOVG32
容器材料/Container Material	铝压铸件/Aluminum Die Caating
调压范围/Pressure Regulating Range	0.05~0.85MPa(0.5~8.5kgf/cm²)
阀型/Valve Type	带溢流型/With Overflow

*还有5、50μm可供选择。/ *5,50μm are available

型号/Model		规格/Specifications							配件/Accessories	
手动放水型/Manual drain	注1)自动排水型/Note 1) Auto drain	组件/Assembiy			注2)额定流量/Note 2)Rated Flow (L/min)	注3)接管口径/Note 3)Port Size (G)	压力表口径/Pressure Gauge Port	重量/Weight (kg)	托架/Bracket	压力表/Pressure Gauge
		过滤器/Filter	减压阀/Regulator	油雾器/Lubricator						
HNAC2000-01M	HNAC2000-01MD	HNAF2000	AR2000	HNAL2000	500	1/8	1/8	0.74	Y20T	G36-10-01
HNAC2000-02M	HNAC2000-02MD					1/4				
HNAC2500-02M	HNAC2500-02MD	HNAF3000	AR2500	HNAL3000	1500	1/4	1/8	1.04	Y30T	
HNAC2500-03M	HNAC2500-03MD					3/8				
HNAC3000-02M	HNAC3000-02MD	HNAF3000	AR3000	HNAL3000	2000	1/4	1/8	1.18	Y30T	
HNAC3000-03M	HNAC3000-03MD					3/8				
HNAC4000-03M	HNAC4000-03MD	HNAF4000	AR4000	HNAL4000	4000	3/8	1/4	2.14	Y40T	G46-10-02
HNAC4000-04M	HNAC4000-04MD					1/2				
HNAC4000-06M	HNAC4000-06MD	HNAF4000-06	AR4000-06	HNAL4000-06	4500	3/4	1/4	2.47	Y50T	
HNAC5000-06M	HNAC5000-06MD	HNAF5000	AR5000	HNAL5000	5000	3/4	1/4	3.82	Y60T	
HNAC5000-10M	HNAC5000-10MD					1				

注1) HNAC2000仅脉冲式自动排水器可选；HNAC2500-HNAC5000自动排水器结构以杠杆式为常规选型，还有浮球式自动自动排水器可选，详细说明请参阅自动排水器介绍。
注2) 供应压力为0.7MPa(7.1kgf/cm²)设定压力为0.5MPa(5.1 kgf/cm²)的情况下。
注3) 接管口径另有Rc、NPT螺纹可供选择。
Note 1) HNAC2000 can only be selected with pulsed type auto drain. The normal auto drain for HNAC2500-HNAC5000 is lever type, but the float type auto drain is available for choose. Please check the details from AUTO DRAIN in page 86~87.
Note 2) The inlet pressure is 0.7MPa(7.1 kgf/cm²), the set pressure is 0.5MPa(5. 1kgf/cm²).
Note 3) Rc ,NPT thread are available.

HNA系列气源处理组合元件(二联件)/ HNA Series Combination Unit(FR+L)
HNAC2010~5010系列/Series



符号/Symbol

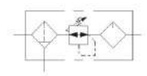

规格/Specification

保证耐压力/Ensured Pressure Resistance	1. 5MPa(15kgf/cm²)
最高使用压力/Highest Working Pressure	1.0MPa(10kgf/cm²)
环境及流体温度/Ambient and Fluid Temperature	5~60℃
过滤精度/ Filter Precision	25μm
建议用油/Recommended Oil Use	透平1号油/Turbine No.1 Oil ISOVG32
容器材料/Container Material	铝压铸件/Aluminum Die Cating
调压范围/Pressure Regulating Range	0.05~0.85MPa(0.5~8.5kgf/cm²)
阀型/Valve Type	带溢流型/With Overflow

* 还有5、50μm可供选择。/ * 5、50μm available in addition.

型号/Model		规格/Specifications						配件/Accessories	
手动放水型/Manual drain	注1)自动排水型/Note 1) Auto drain	组件/Assembiy		注2)额定流量/Note 2)Rated Flow(L/min)	注3)接管口径/Note 3)Port Size (G)	压力表口径/Pressure Gauge Port	重量/Weight (kg)	托架/Bracket	压力表/Pressure Gauge
		过滤减压阀/Filter Regulator	油雾器/Lubricator						
HNAC2010-01M	HNAC2010-01MD	HNAW2000	HNAL2000	500	1/8	1/8	0.66	Y20T	G36-10-01
HNAC2010-02M	HNAC2010-02MD				1/4				
HNAC3010-02M	HNAC3010-02MD	HNAW3000	HNAL3000	1700	1/4	1/8	0.98	Y30T	
HNAC3010-03M	HNAC3010-03MD				3/8				
HNAC4010-03M	HNAC4010-03MD	HNAW4000	HNAL4000	3000	3/8	1/4	1.93	Y40T	G46-10-02
HNAC4010-04M	HNAC4010-04MD				1/2				
HNAC4010-06M	HNAC4010-06MD	HNAW4000-06	HNAL4000-06	3000	3/4	1/4	1.99	Y50T	
HNAC5010-06M	HNAC5010-06MD	HNAW5000	HNAL5000	4000	3/4	1/4	3.20	Y60T	
HN AC5010-10M	HN AC5010-10MD				1				

注1) HNAC2010仅脉冲式自动排水器可选；HNAC3010-HNAC5010自动排水器结构以杠杆式为常规选型，还有浮球式自动自动排水器可选，详细说明请参阅自动排水器介绍。
注2) 供应压力为0.7MPa(7.1kgf/cm²)设定压力为0.5MPa(5.1 kgf/cm²)的情况下。
注3) 接管口径另有Rc、NPT螺纹可供选择。
Note 1) HNAC2010 can only be selected with pulsed type auto drain. The normal auto drain for HNAC3010-HNAC5010 is lever type, but the float type auto drain is available for choose. Please check the details from AUTO DRAIN in page 86~87.
Note 2) The inlet pressure is 0.7MPa(7.1 kgf/cm²), the set pressure is 0.5MPa(5. 1kgf/cm²).
Note 3) Rc ,NPT thread are available.

HNA系列空气过滤器/HNA Series Air Filter
HNAF2000~5000系列/Series

规格/Specification

保证耐压力/Ensured Pressure Resistance	1. 5MPa(15kgf/cm²)
最高使用压力/Highest Working Pressure	1.0MPa(10kgf/cm²)
环境及流体温度/Ambient and Fluid Temperature	5~60℃
*过滤精度/*Filter Precision	25μm
滤芯材质/Filter material	铜/Brass
容器材料/Container Material	铝压铸件/Aluminum Die Caating

*还有5、50μm可供选择。*5,50μm are available
还有PE材质滤芯可供选择。PE material filter element is available.

符号/Symbol

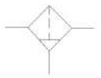

型号/Model		规格/Specifications				配件 / Accessories	放水器功能 /Drain Function
手动放水型/ Manual drain	注1)自动排水型/ Note 1) Auto drain	注2)额定流量 /Note 2)Rated Flow (L/min)	注3)接管口径 /Note 3)Port Size (G)	杯容量(cm³) /Bowl Caapacity	重量 /Weight (kg)	托架 /Bracket	
HNAF2000-01M	HNAF2000-01MD	750	1/8	15	0.17	B240	手动排水 /Manual Drain
HNAF2000-02M	HNAF2000-02MD		1/4				
HNAF3000-02M	HNAF3000-02MD	1500	1/4	20	0.29	B340	a.停气排水 /Air Shutoff Drain
HNAF3000-03M	HNAF3000-03MD		3/8				
HNAF4000-03M	HNAF4000-03MD	4000	3/8	45	0.53	B440	
HNAF4000-04M	HNAF4000-04MD		1/2				
HNAF4000-06M	HNAF4000-06MD	6000	3/4	45	0.58	B540	b.手动排水 /Manual Drain
HNAF5000-06M	HNAF5000-06MD	7000	3/4	130	1.05	B640	
HNAF5000-10M	HNAF5000-10MD		1				

注1) HNAF2000仅脉冲式自动排水器可选；HNAF3000-HNAF5000自动排水器结构以杠杆式为常规选型，还有浮球式自动自动排水器可选，详细说明请参阅自动排水器介绍。
注2) 供应压力为0.7MPa(7.1kgf/cm²)设定压力为0.5MPa(5.1 kgf/cm²)的情况下。
注3) 接管口径另有Rc、NPT螺纹可供选择。
Note 1) HNAF2000 can only be selected with pulsed type auto drain. The normal auto drain for HNAF3000-HNAF5000 is lever type, but the float type auto drain is available for choose. Please check the details from AUTO DRAIN in page 86~87.
Note 2) The inlet pressure is 0.7MPa(7.1 kgf/cm²), the set pressure is 0.5MPa(5. 1kgf/cm²).
Note 3) Rc ,NPT thread are available.

外形尺寸图/Overall Dimension Drawing(mm)

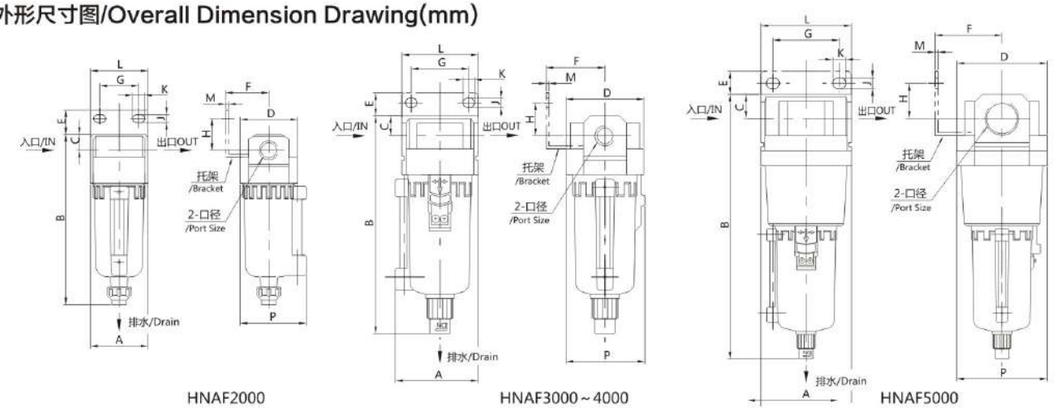

HNAF2000　　HNAF3000～4000　　HNAF5000

型号/Model	口径/ Port Size(G)	A	B	C	D	E	F	G	H	J	K	L	M	P	B (带自动排水器) B (With Auto drain)
HNAF2000	1/8~1/4	40	119.5	11	40	17	30	27	23	5.4	8.4	40	2.3	40	*119.5
HNAF3000	1/4~3/8	57.5	154	14	53	16	41	40	23	6.5	8	53	2.3	55	149
HNAF4000	3/8~1/2	74	184	18	70	17	50	54	26	8.5	10.5	70	2.3	72.5	179.5
HNAF4000-06	3/4	76.5	188	20	70	14	50	54	25	8.5	10.5	70	2.3	72.5	183.5
HNAF5000	3/4~1	90	263	24	90	23	66.5	66	35	11	13	90	3.2	90	258.5

*HNAF2000自动排水为脉冲式自动排水，尺寸与常规放水一样。HNAF2000 AUTO DRAIN is a Pulsed Type auto drain, and the size is the same as that of conventional drainage.

HNA系列油雾器/HNA Series Air Lubricator
HNAL2000~5000系列/Series

规格/Specification

保证耐压力/Ensured Pressure Resistance	1. 5MPa(15kgf/cm²)
最高使用压力/Highest Working Pressure	1.0MPa(10kgf/cm²)
环境及流体温度/Ambient and Fluid Temperature	5~60℃
建议用油/Recommended Oil Use	透平1号油/Turbine No.1 Oil ISOVG32
容器材料/Container Material	铝压铸件/Aluminum Die Casting

符号/Symbol

Auto drain

型号 /Model	规格/Specifications					配件/Accessories
	注1)油滴最小流量 /Note 1)Minimal Flow of Oil Drop(L/min)	注2)额定流量 /Note 2)Rated Flow (L/min)	注3)接管口径 /Note 3)Port Size (G)	杯容量(cm³) /Bowl Capacity	重量 /Weight (kg)	托架 /Bracket
HNAL2000-01M	15	800	1/8	25	0.17	B240
HNAL2000-02M			1/4			
HNAL3000-02M	30	1700	1/4	50	0.30	B340
HNAL3000-03M	40		3/8			
HNAL4000-03M	40	5000	3/8	130	0.53	B440
HNAL4000-04M	50		1/2			
HNAL4000-06M	50	6300	3/4	130	0.59	B540
HNAL5000-06M	190	7000	3/4	130	1.13	B640
HNAL5000-10M			1			

注1) 供应压力为0.5MPa(5.1kgf/cm²)，油滴流量为5滴/分钟，透平1号油(SOVG32)温度20℃情况下。
注2) 供应压力为0.5MPa(5.1 kgf/cm)，压降为0.03MPa(0.3 kgf/cm²)情况下。
注3) 接管口径另有Rc、NPT，螺纹可供选择。
Note 1) Under the circumstance that the supply pressure is 0. 5MPa(5. 1kgf/cm²), oil drop fiow is 5 drops/minute, use of Turbine No. 1 Oil (ISOVG32) and 20℃ temperaure.
Note 2) Under the circumstance that the supply pressure is 0.5MPA(5.1kgf/cm²)and pressure drop is 0. 03MPa(0. 3kgf/cm²).
Note 3) Rc and NPT thread are available.

外形尺寸图/Overall Dimension Drawing(mm)

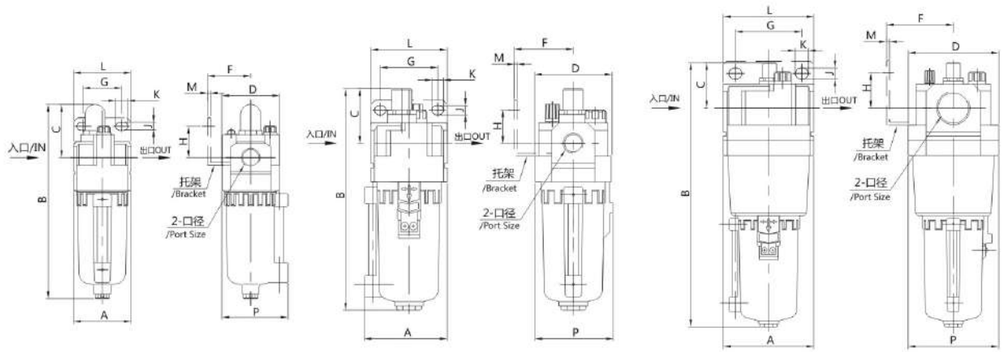

HNAL2000　　HNAL3000～4000　　HNAL5000

型号/Model	口径/Port Size(G)	A	B	C	D	F	G	H	J	K	L	M	P
HNAL2000	1/8~1/4	40	137	38	50	30	27	22	5.4	8.4	40	2.3	46
HNAL3000	1/4~3/8	57.4	154.5	38	53	41	40	23	6.5	8	53	2.3	55
HNAL4000	3/8~1/2	74	185.5	41	70	50	54	26	8.5	10.5	70	2.3	72.5
HNAL4000-06M	3/4	76.5	185.5	39	70	50	54	25	8.5	10.5	70	2.3	72.5
HNAL5000	3/4~1	90	262.5	45	90	66.5	66	35	11	13	90	3.2	90

HNA系列过滤减压阀/HNA Series Filter Regulator
HNAW2000~5000系列/Series

规格/Specification

保证耐压力/Ensured Pressure Resistance	1. 5MPa(15kgf/cm²)
最高使用压力/Highest Working Pressure	1.0MPa(10kgf/cm²)
环境及流体温度/Ambient and Fluid Temperature	5~60℃
*过滤精度/Filter Precision	25μm
容器材料/Container Material	铝压铸件/Aluminum Die Caating
调压范围/Pressure Regulating Range	0.05~0.85MPa(0.5~8.5kgf/cm²)
阀型/Valve Type	带溢流型/With Over□ow

*还有5、50μm可供选择。/ *5,50μm are available

符号/Symbol

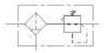

型号/Model		规格/Specifications				配件/Accessories		放水器功能/Drain Function
手动放水型/Manual drain	注1)自动排水型/Note 1) Auto drain	注2)额定流量/Note 2)Rated Flow (L/min)	注3)接管口径/Note 3)Port Size (G)	压力表口径/Pressure Gauge Port	重量/Weight (kg)	托架/Bracket	压力表/Pressure Gauge	
HNAW2000-01M	HNAW2000-01MD	550	1/8	1/8	0.29	B220	G36-10-01	手动排水/Manual Drain
HNAW2000-02M	HNAW2000-02MD		1/4					
HNAW3000-02M	HNAW3000-02MD	2000	1/4	1/8	0.55	B320		a.停气排水/Air Shutoff Drain
HNAW3000-03M	HNAW3000-03MD		3/8					
HNAW4000-03M	HNAW4000-03MD	4000	3/8	1/4	1.16	B420	G46-10-02	b.手动排水/Manual Drain
HNAW4000-04M	HNAW4000-04MD		1/2					
HNAW4000-06M	HNAW4000-06MD	4500	3/4	1/4	1.2			
HNAW5000-06M	HNAW5000-06MD	5500	3/4	1/4	1.79			
HNAW5000-10M	HNAW5000-10MD		1					

注1) HNAW2000仅脉冲式自动排水器可选；HNAW3000-HNAW5000自动排水器结构以杠杆式为常规选型，还有浮球式自动自动排水器可选，详细说明请参阅自动排水器介绍。
注2) 供应压力为0.7MPa(7.1kgf/cm²)设定压力为0.5MPa(5.1 kgf/cm²)的情况下。
注3) 接管口径另有Rc、NPT螺纹可供选择。
Note 1) HNAW2000 can only be selected with pulsed type auto drain. The normal auto drain for HNAF3000-HNAF5000 is lever type, but the float type auto drain is available for choose. Please check the details from AUTO DRAIN in page 86~87.
Note 2) The inlet pressure is 0.7MPa(7.1 kgf/cm²), the set pressure is 0.5MPa(5. 1kgf/cm²).
Note 3) Rc ,NPT thread are available.

外形尺寸图/Overall Dimension Drawing(mm)

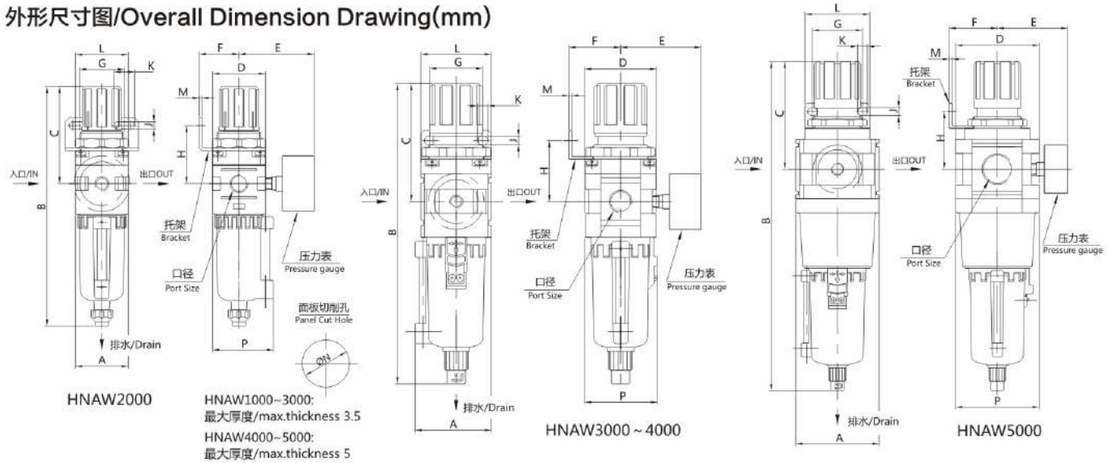

型号/Model	口径/Port Size(G)	A	B	C	D	E	F	G	H	J	K	L	M	P	N	B (带自动排水器) B (With Auto drain)
HNAW2000	1/8~1/4	40	186.5	78	40	56.8	30	34	43.5	5.4	15.4	55	2.3	46	33.5	186.5
HNAW3000	1/4~3/8	57.4	232.5	92.5	53	60.8	39	40	46	6.5	8	53	2.3	55	42.5	227.5
HNAW4000	3/8~1/2	74	278	112	70	70.5	49.2	54	53.5	8.5	10.5	70	2.3	72.5	52.5	273.5
HNAW4000-06M	3/4	76.5	282	114	70	70.5	49.2	54	55.5	8.5	10.5	70	2.3	72.5	52.5	277.5
HNAW5000	3/4~1	90	355	116	90	70.5	49.2	54	62	8.5	10.5	70	3.2	90	52.5	351.5

HACE系列气源处理组合元件(三联件)/HACE Series Combination Unit(F+R+L)
HACE2000~5000系列/Series

型号命名方法/How To Order

HAC E 3000 - 03 D - □

- ●HAC (HA系列杯体和放水结构) HA series cup structure
- △HNAC (金属杯系列杯体和放水结构) HNA series cup structure
- △AC(普通的杯体和放水结构) A series cup structure

- ●E：嵌入式方形压力表 Square gauge
- △G：常规圆形压力表 Normal round gauge
- △EP: 嵌入式压力开关 Embedded pressure switch

●标准配置/Standard
△可选配置/Optional

2000	01~02(1/8~1/4)
3000	02~03(1/4~3/8)
4000	03~06(3/8~3/4)
5000	06~10(3/4~1)

- 无: 标准 No: Standard
- D: 自动排水 Auto drain

- ●无：非嵌入式压力开关 No：No Embedded pressure switch
- △EP嵌入式压力开关输出信号：EP Embedded pressure switch output：

输出规格 Output specifications

标准系列/Standard	001	2NPN
	002	2PNP
	003	1NPN+1PNP
	010	2NPN+1模拟输出/Analog output(1~5V)
	011	2NPN+1模拟输出/Analog output(4~20mA)
	012	1NPN+1PNP+1模拟输出/Analog output(1~5V)
	020	2PNP+1模拟输出/Analog output(1~5V)
	021	2PNP+1模拟输出/Analog output(4~20mA)
	030	1NPN+1RS485
	031	1PNP+1RS485
定制系列 Customized	000	定制规格/Custom Specifications

符号/Symbol

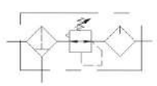

特性/Features

此款产品在压力表的安装方式和产品的溢流结构上做了改进，使产品的使用更方便，溢流灵敏更高。
This product has been improved in installation of pressure gauge and overflow structure, make the use of the product more convenient, more sensitive overflow.

规格/Specification

保证耐压力/Ensured Pressure Resistance	1. 5MPa(15kgf/cm²)
最高使用压力/Highest Working Pressure	1.0MPa(10kgf/cm²)
环境及流体温度/Ambient and Fluid Temperature	5~60℃
*过滤精度/*Filter Precision	25μm
建议用油/Recommended Oil Use	透平1号油 /Turbine No.1 Oil ISOVG32
容器材料/Container Material	聚碳酸酯/Polycarbonate
防护罩/Protective Cover	HACE2000(无/No Available) HACE3000-5000(有/Available)
调压范围/Pressure Regulating Range	0.05~0.85MPa(0.5~8.5kgf/cm²)
阀型/Valve Type	带溢流型/Wlith Overflow

*还有5、50μm可供选择。/ *5,50μm are available

型号/Model		规格/Specifications							配件/Accessories	
手动放水型/Manual drain	注1)自动排水型/Note 1) Auto drain	组件/Assembiy			注2)额定流量/Note2)Rated Flow (L/min)	注3)接管口径/Note3)Port Size (G)	压力表口径/Pressure Gauge Port	重量/Weight (kg)	托架/Bracket	注4)压力表/Note4)Pressure Gauge
		过滤器/Filter	减压阀/Regulator	油雾器/Lubricator						
HACE2000-01	HACE2000-01D	HAF2000	HARE2000	AL2000	500	1/8	1/8	0.74	Y20L	FG28-1 EP30-1 G36-10-01
HACE2000-02	HACE2000-02D					1/4				
HACE3000-02	HACE3000-02D	HAF3000	HARE3000	HAL3000	2000	1/4		1.18	Y30L	
HACE3000-03	HACE3000-03D					3/8				
HACE4000-03	HACE4000-03D	HAF4000	HARE4000	HAL4000	4000	3/8	1/4	2.14	Y40L	FG28-1 EP30-1 G46-10-02
HACE4000-04	HACE4000-04D					1/2				
HACE4000-06	HACE4000-06D	HAF4000-06	HARE4000-06	HAL4000-06	4500	3/4		2.47	Y50L	
HACE5000-06	HACE5000-06D	HAF5000	HARE5000	HAL5000	5000	3/4		3.82	Y60L	
HACE5000-10	HACE5000-10D					1				

注1) HACE2000有两种自动排水结构可选，脉冲式自动排水器为常规选型，还有杠杆式自动排水器可选，订货时用“D2”表示；
HACE3000~HACE5000自动排水器结构以杠杆式为常规选型，还有浮球式自动排水器可选，详细说明请参阅自动排水器介绍。
注2) 供应压力为0.7MPa(7.1 kgf/cm²)设定压力为0.5MPa(5.1 kgf/cm²)的情况下.
注3) 接管口径另有NPT螺纹可供选择。
注4) 本款产品一般情况下配置为嵌入式方形压力表（FG28-1），也可以根据客户要求配置圆形压力表（G36-10-01、G46-10-02）和嵌入式压力开关(EP30-1-003)。
Note 1) There are 2 types auto drain for HACE2000, pulsed type and lever type. *D*means normal auto drain, pulsed type; *D2*means lever type auto drain.
The normal auto drain for HACE3000-HACE5000 is lever type, but the float type auto drain is available for choose. Please check the details from AUTO DRAIN in page 86~87.
Note 2) The inlet pressure is 0.7Mpa(7.1kgf/cm²), the set pressure is 0.5Mpa(5.1 kgf/cm).
Note 3) Rc ,NPT thread are available.
Note 4) The normal gauge for this product is square gauge(FG28-1),normal round gauge(G36-10-01,G46-10-02) and embedded digital pressure switch are available for choose (EP30-1-003).

外形尺寸图/Overall Dimension Drawing(mm)

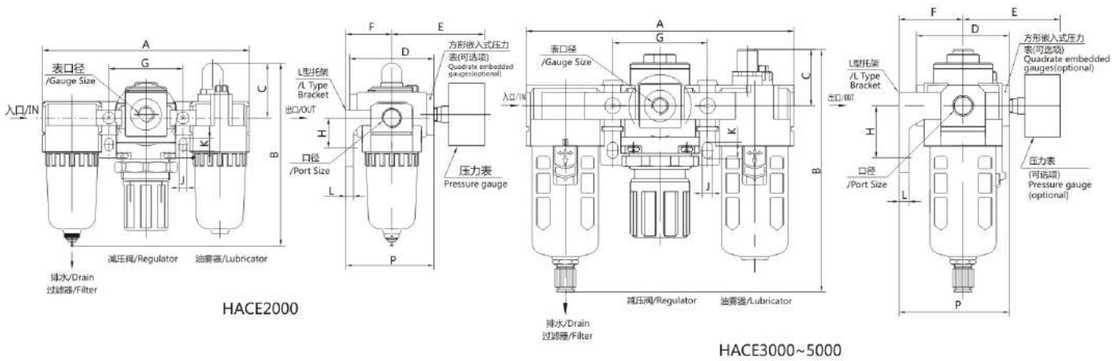

型号/Model	口径/Port Size(G)	A	B	C	D	E	F	G	H	J	K	L	P	B (带自动排水器) B (With Auto drain)	
HACE2000	1/8~1/4	140	122	38	58	62.5	30	50	24	5.5	8.5	5	59	145	*160
HACE3000	1/4~3/8	182	164	38	63	65.5	41	64	35	7	11	7	71.5	172	
HACE4000	3/8~1/2	238	198	41	80	78.5	50	84	40	9	13	7	90	196	
HACE4000-06	3/4	258	198	40.5	80	78.5	50	89	40	9	13	7	90	196	
HACE5000	3/4~1	300	274	48	90	80.5	70	105	50	12	16	10.5	113	273	

*标注标尺寸为杠杆式自动放水器高度尺寸。*This size is for lever type auto drain.

HACE系列气源处理组合元件(二联件)/HACE Series Combination Unit(FR+L) HACE2010~5010系列/Series

型号命名方法/How To Order

HAC E 2010 - 02 D - □

- ●HAC (HA系列杯体和放水结构) HA series cup structure
- △HNAC (金属杯系列杯体和放水结构) HNA series cup structure
- △AC(普通的杯体和放水结构) A series cup structure

- ●E：嵌入式方形压力表 Square gauge
- △G：常规圆形压力表 Normal gauge
- △EP: 嵌入式压力开关 Embedded pressure switch

●标准配置/Standard
△可选配置/Optional

2010	01~02(1/8~1/4)
3010	02~03(1/4~3/8)
4010	03~06(3/8~3/4)
5010	06-10(3/4~1)

- 无：标准 No: Standard
- D: 自动排水 Auto drain

- ●无：非嵌入式压力开关 No：No Embedded pressure switch
- △EP嵌入式压力开关输出信号：EP Embedded pressure switch output：

输出规格 Output specifications

标准系列/Standard	001	2NPN
	002	2PNP
	003	1NPN+1PNP
	010	2NPN+1模拟输出/Analog output(1~5V)
	011	2NPN+1模拟输出/Analog output(4~20mA)
	012	1NPN+1PNP+1模拟输出/Analog output(1~5V)
	020	2PNP+1模拟输出/Analog output(1~5V)
	021	2PNP+1模拟输出/Analog output(4~20mA)
	030	1NPN+1RS485
	031	1PNP+1RS485
定制系列 Customized	000	定制规格/Custom Specifications

符号/Symbol

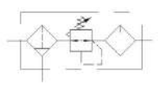

特性/Features

此款产品在压力表的安装方式和产品的溢流结构上做了改进，使产品的使用更方便，溢流灵敏更高。
This product has been improved in installation of pressure gauge and overflow structure, make the use of the product more convenient, more sensitive overflow.

规格/ Specification

保证耐压力/ Ensured Pressure Resistance	1. 5MPa(15kgf/cm²)
最高使用压力/Highest Working Pressure	1.0MPa(10kgf/cm²)
环境及流体温度/Ambient and Fluid Temperature	5~60℃
过滤精度/ Filter Precision	25μm
建议用油/Recommended Oil Use	透平1号油 /Turbine No.1 Oil ISOVG32
容器材料/Container Material	聚碳酸酯/Polycarbonate
防护罩/Protective Cover	HACE2010(无/No Available) HACE3010-5010(有/Available)
调压范围/Pressure Regulating Range	0.05-0.85MPa(0.5-8.5kgf/cm²)
阀型/Valve Type	带溢流型/Wlith Overflow

*还有5、50μm可供选择。/ *5,50μm are available

HACE系列气源处理元件/ HACE Series Air Preparation Units

型号/Model		规格/Specifications						配件/Accessories	
手动放水型/ Manual drain	注1)自动排水型/ Note 1) Auto drain	组件/Assembiy		注2)额定流量 Note 2) Rated Flow (L/min)	注3)接管口径 Port Size (G)	压力表口径 /Pressure Gauge Port	重量 /Weight (kg)	托架 /Bracket	注4)压力表 /Pressure Gauge
		过滤减压阀 /FilterRegulator	油雾器 /Lubricator						
HACE2010-01	HACE2010-01D	HAWE2000	AL2000	500	1/8	1/8	0.50	Y20T	FG28-1 EP30-1 G36-10-01
HACE2010-02	HACE2010-02D				1/4				
HACE3010-02	HACE3010-02D	HAWE3000	HAL3000	1700	1/4		0.95	Y30T	
HACE3010-03	HACE3010-03D				3/8				
HACE4010-03	HACE4010-03D	HAWE4000	HAL4000	3000	3/8	1/4	1.98	Y40T	FG28-1 EP30-1 G46-10-02
HACE4010-04	HACE4010-04D				1/2				
HACE4010-06	HACE4010-06D	HAWE4000-06	HAL4000-06	3000	3/4	1/4	2.25	Y50T	
HACE5010-06	HACE5010-06D	HAWE5000	HAL5000	4000	3/4	1/4	3.28	Y60T	
HACE5010-10	HACE5010-10D				1				

注1) HACE2010有两种自动排水结构可选，脉冲式自动排水器为常规选型，还有杠杆式自动排水器可选，订货时用“D2”表示；
HACE3010~HACE5010自动排水器结构以杠杆式为常规选型，还有浮球式自动排水器可选，详细说明请参阅自动排水器介绍。
注2) 供应压力为0.7MPa(7.1 kgf/cm²)设定压力为0.5MPa(5.1 kgf/cm²)的情况下。
注3) 接管口径另有Rc和NPT螺纹可供选择。
注4) 本款产品一般情况下配置为嵌入式方形压力表（FG28-1），也可以根据客户要求配置圆形压力表（G36-10-01、G46-10-02）和嵌入式压力开关(EP30-1-003)。
Note 1) There are 2 types auto drain for HACE2010, pulsed type and lever type. "D"means normal auto drain, pulsed type. "D2 " means lever type auto drain.
The normal auto drain for HACE3010~HACE5010 is lever type, but the float type auto drain is available for choose. Please check the details from AUTO DRAIN in page 86~87.
Note 2) The inlet pressure is 0. 7MPa(7. 1kgf/cm²), the set pressure is 0. 5MPa(5. 1kgf/cm²).
Note 3) Pc and NPT thread are available.
Note 4) The normal gauge for this product is square gauge(FG28-1),normal round gauge (G36-10-01,G46-10-02) and embedded digital pressure switch are available for choose (EP30-1-003).

外形尺寸图/Overall Dimension Drawing(mm)

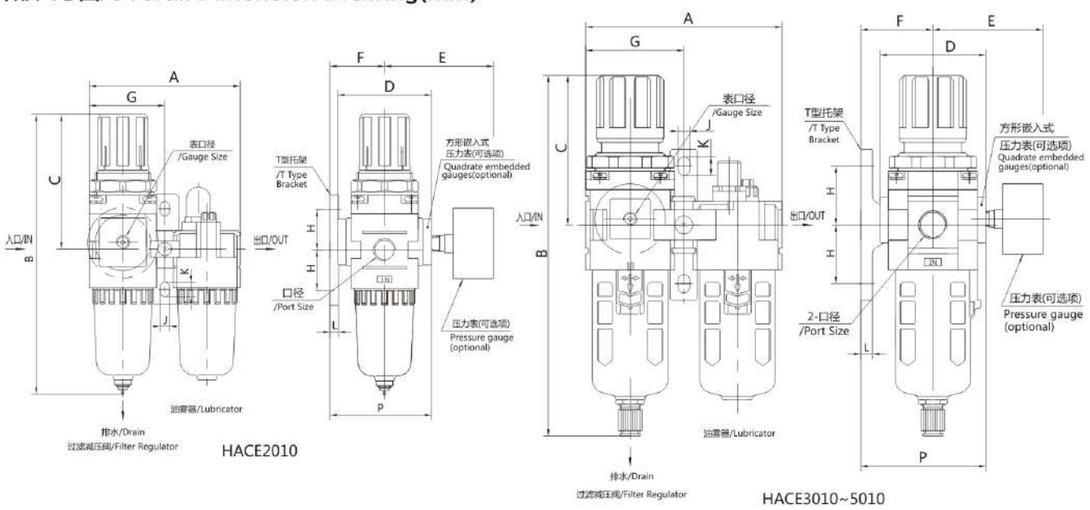

型号/Model	口径/Port Size(G)	A	B	C	D	E	F	G	H	J	K	L	P	B (带自动排水器) B (With Auto drain)	
HACE2010	1/8~1/4	90	165	80	57	62.5	30	45	24	5.5	8.5	5	60	189	*204
HACE3010	1/4~3/8	117	215	92.5	63	65.5	41	58.5	35	7	11	7	74	223	
HACE4010	3/8~1/2	154	264	112	70	78.5	50	77	40	9	13	7	91.5	262	
HACE4010-06	3/4	164	269	114	70	78.5	50	82	40	9	13	7	91.5	266	
HACE5010	3/4~1	195	348	116	90	80.5	70	97.5	50	12	16	10.5	115	343	

*标注标尺寸为杠杆式自动放水器高度尺寸。*This size is for lever type auto drain.

HACE系列气源处理元件/HACE Series Air Preparation Units

HACE系列减压阀/HACE Series Air Regulator HARE2000~5000系列/Series

型号命名方法/How To Order

HAR E 4000 - 03 - □

- HAR: HAR(减压阀) Regulator
- E:
  - ●E：嵌入式方形压力表 Square gauge
  - △G：常规圆形压力表 Normal gauge
  - △EP: 嵌入式压力开关 Embedded pressure switch
  - ●标准配置/Standard
  - △可选配置/Optional
- 4000:
  - 1500
  - 2000
  - 3000
  - 4000
  - 5000
- 03:
  - M5, 01(M5, 1/8)
  - 01~02(1/8~1/4)
  - 02~03(1/4~3/8)
  - 03~06(3/8~3/4)
  - 06~10(3/4~1)
- □:
  - ●无：非嵌入式压力开关 No：No Embedded pressure switch
  - △EP嵌入式压力开关输出信号：EP Embedded pressure switch output：
  - 输出规格 Output specifications

标准系列/Standard	001	2NPN
	002	2PNP
	003	1NPN+1PNP
	010	2NPN+1模拟输出/Analog output(1~5V)
	011	2NPN+1模拟输出/Analog output(4~20mA)
	012	1NPN+1PNP+1模拟输出/Analog output(1~5V)
	020	2PNP+1模拟输出/Analog output(1~5V)
	021	2PNP+1模拟输出/Analog output(4~20mA)
	030	1NPN+1RS485
	031	1PNP+1RS485
定制系列 Customized	000	定制规格/Custom Specifications

符号/Symbol

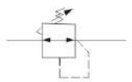

特性/Features

此款产品在压力表的安装方式和产品的溢流结构上做了改进，使产品的使用更方便，溢流灵敏更高。
This product has been improved in installation of pressure gauge and overflow structure, make the use of the product more convenient, more sensitive overflow.

规格/Specification

保证耐压力/ Ensured Pressure Resistance	1. 5MPa(15kgf/cm²)
最高使用压力/Highest Working Pressure	1.0MPa(10kgf/cm²)
环境及流体温度/Ambient and Fluid Temperature	5~60℃
*调压范围/Pressure Regulating Range	0.05~0.85MPa(0.5~8.5kgf/cm²)
阀型/Valve Type	带溢流型/With Overflow

*还有调压范围0.05~0.2MPa(0.5~2 kgf/cm²)/ *Pressure range0.05~0.5Mpa(0.5~2 kgf/cm²) is available.

型号 /Model	规格/Specifications				配件 /Accessories	
	注1)额定流量 /Note 1)Rated Flow (L/min)	注2)接管口径 /Note 2)Port Size (G)	压力表口径 /Pressure Gauge Port	重量 /Weight (kg)	托架 /Bracket	注3)压力表 /Note 3)Pressure Gauge
HARE1500-M5	250	M5	1/8	0.18	B120	FG28-1 EP30-1 G36-10-01
HARE1500-01		1/8				
HARE2000-01	550	1/8	1/8	0.25	B220	
HARE2000-02		1/4				
HARE3000-02	2500	1/4	1/8	0.42	B320	
HARE3000-03		3/8				
HARE4000-03	6000	3/8	1/4	0.91	B420	FG28-1 EP30-1 G36-10-01
HARE4000-04		1/2				
HARE4000-06		3/4		0.95		
HARE5000-06	8000	3/4	1/4	1.25		
HARE5000-10		1				

注1) 供应压力为0.7MPa(7.1kgf/cm²)设定压力为0.5MPa(5.1kgfm)的情况下。
注2) 接管口径另有Rc、NPT螺纹可供选择。
注3) 本款产品一般情况下配置为嵌入式方形压力表(FG28-1),也可根据客户要求配置圆形压力表(G36-10-01、G46-10-02)和嵌入式压力开关(EP30-1-003)。
Note 1) Under the circumstance that the supply pressure is0.7MPa(7.1 kgf/cm²)and set pressure is0.5MPa(5.1 kgf/cm²).
Note 2) Rc and NPT thread are available.
Note 3) The normal gauge for this product is square gauge(FG28-1),normal round gauge (G36-10-01,G46-10-02) and embedded digital pressure switch are available for choose (EP30-1-003).

外形尺寸图/Overall Dimension Drawing(mm)

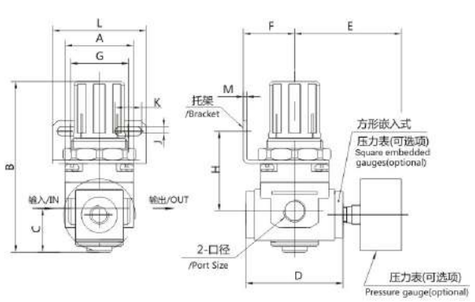

HARE1500~2000

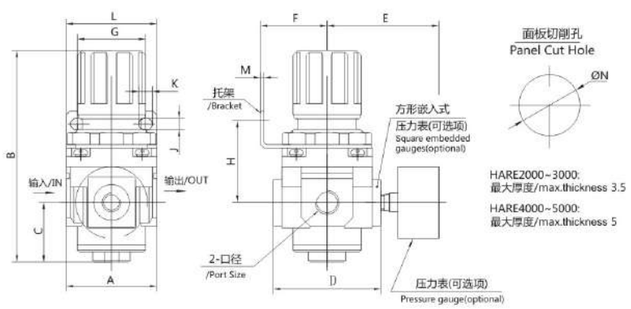

HARE3000~5000

型号/Model	口径/Port Size(G)	A	B	C	D	E	F	G	H	J	K	L	M	N
HARE1500	M5~1/8	31	62	13	42	56	25	28	31	4.5	6.5	40	2	20.5
HARE2000	1/8~1/4	40	100	24	58	56.8	30	34	44	5.4	15.4	55	2.3	33.5
HARE3000	1/4~3/8	53	124.5	35	64	60.8	39	40	46	6.5	8	53	2.3	42.5
HARE4000	3/8~1/2	70	146.5	37.5	80.5	65.5	49.2	54	54	8.5	10.5	70	2.3	52.5
HARE4000-06	3/4	75	151	40.5	80.5	69.5	49.2	54	55.5	8.5	10.5	70	2.3	52.5
HARE5000	3/4~1	90	165	48	90	75.5	49.2	54	62	8.5	10.5	70	3.2	52.5

HACE系列过滤减压阀/HACE Series Filter Regulator HAWE2000~5000系列/Series

型号命名方法/How To Order

HAW E 3000 - 03 D - □

- ●HAW (HA系列杯体和放水结构) HA series cup structure
- △HNAW (金属杯系列杯体和放水结构) HNA series cup structure
- △AW(普通的杯体和放水结构) A series cup structure

- ●E：嵌入式方形压力表 Square gauge
- △G：常规圆形压力表 Normal gauge
- △EP: 嵌入式压力开关 Embedded pressure switch

●标准配置/Standard
△可选配置/Optional

- 2000
- 3000
- 4000
- 5000

- 01~02(1/8~1/4)
- 02~03(1/4~3/8)
- 03~06(3/8~3/4)
- 06~10(3/4~1)

- 无: 标准 No: Standard
- D: 自动排水 Auto drain

- ●无：非嵌入式压力开关 No：No Embedded pressure switch
- △EP嵌入式压力开关输出信号：EP Embedded pressure switch output：

输出规格 Output specifications

标准系列/Standard	001	2NPN
	002	2PNP
	003	1NPN+1PNP
	010	2NPN+1模拟输出/Analog output(1~5V)
	011	2NPN+1模拟输出/Analog output(4~20mA)
	012	1NPN+1PNP+1模拟输出/Analog output(1~5V)
	020	2PNP+1模拟输出/Analog output(1~5V)
	021	2PNP+1模拟输出/Analog output(4~20mA)
	030	1NPN+1RS485
	031	1PNP+1RS485
定制系列 Customized	000	定制规格/Custom Specifications

符号/Symbol

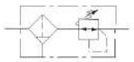

特性/Features

此款产品在压力表的安装方式和产品的溢流结构上做了改进，使产品的使用更方便，溢流灵敏更高。
This product has been improved in installation of pressure gauge and overflow structure, make the use of the product more convenient, more sensitive overflow.

规格/Specification

保证耐压力/Ensured Pressure Resistance	1. 5MPa(15kgf/cm²)
最高使用压力/Highest Working Pressure	1.0MPa(10kgf/cm²)
环境及流体温度/Ambient and Fluid Temperature	5~60℃
*过滤精度/Filter Precision	25μm
容器材料/Container Material	聚碳酸酯/Polycarbonate
防护罩/Protective Cover	HAWE2000(无/No Available) HAWE3000-5000(有/Available)
调压范围/Pressure Regulating Range	0.05~0.85MPa(0.5~8.5kgf/cm²)
阀型/Valve Type	带溢流型/Wlith Overflow

*还有5、50μm可供选择。/ *5,50μm are available

HACE系列气源处理元件/HACE Series Air Preparation Units

型号/Model		规格/Specifications				配件/Accessories		放水器功能/Drain Function
手动放水型/Manual drain	注1)自动排水型/Note 1) Auto drain	注2)额定流量 Note2) Rated Flow (L/min)	注3)接管口径 Note3)Port Size (G)	压力表口径 /Pressure Gauge Port	重量 /Weight (kg)	托架 /Bracket	注4)压力表/Note 4)Pressure Gauge	
HAWE2000-01	HAWE2000-01D	550	1/8	1/8	0.36	B220	FG28-1 EP30-1 G36-10-01	手动排水 /Manual Drain
HAWE2000-02	HAWE2000-02D		1/4					
HAWE3000-02	HAWE3000-02D	2000	1/4	1/8	0.56	B320		a.停气排水 /Air Shutoff Drain b.手动排水 /Manual Drain
HAWE3000-03	HAWE3000-03D		3/8					
HAWE4000-03	HAWE4000-03D	4000	3/8	1/4	1.15	B420	FG28-1 EP30-1 G46-10-02	
HAWE4000-04	HAWE4000-04D		1/2					
HAWE4000-06	HAWE4000-06D	4500	3/4	1/4	1.21			
HAWE5000-06	HAWE5000-06D	5500	3/4	1/4	1.70			
HAWE5000-10	HAWE5000-10D		1					

注1) HAWE2000有两种自动排水结构可选，脉冲式自动排水器为常规选型，还有杠杆式自动排水器可选，订货时用“D2”表示如: HAWE2000-02D2;
HAWE3000~HAWE5000自动排水器结构以杠杆式为常规选型，还有浮球式自动排水器可选，详细说明请参阅自动排水器介绍。
注2) 供应压力为0.7MPa(7.1 kgf/cm²)设定压力为0.5MPa(5.1 kgf/cm²)的情况下。
注3) 接管口径另有PT螺纹可供选择。
注4) 本款产品一般情况下配置为嵌入式方形压力表(FG28-1),也可以根据客户要求配置圆形压力表(G36-10-01、G46-10-02)和嵌入式压力开关(EP30-1-003)。

Note 1) There are 2 types auto drain for HAWE2000, pulsed type and lever type. " D"means normal auto drain, pulsed type: "D2 "means lever type auto drain.
For Example: HAWE2000-02D2. The normal auto drain for HAWE3000-HAWE5000 is lever type, but the float type auto drain is available for choose. Please check the details from AUTO DRAIN in page 86~87.
Note 2) Under the circumstance that the supply pressure is 0. 7MPa(7. 1kgf/cm²)and set pressure is 0. 5MPa(5. 1 kgf/cm²).
Note 3) Rc and NPT thread are available.
Note 4) The normal gauge for this product is square gauge(FG28-1),normal round gauge (G36-10-01,G46-10-02) and embedded digital pressure switch are available for choose (EP30-1-003).

外形尺寸图/Overall Dimension Drawing(mm)

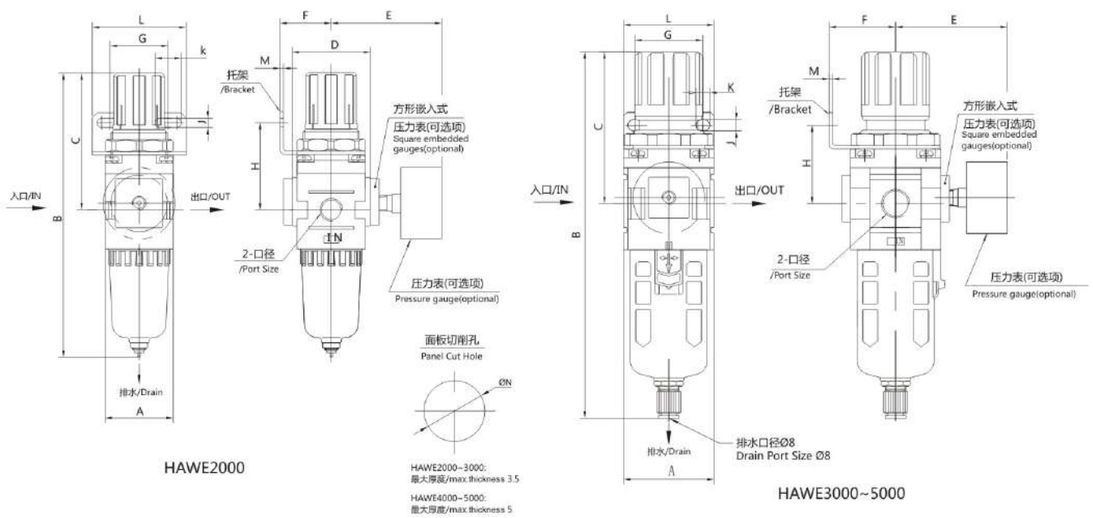

型号/Model	口径/Port Size(G)	A	B	C	D	E	F	G	H	J	K	L	M	N	B (带自动排水器) B (With Auto drain)	
HAWE2000	1/8~1/4	40	164.5	80	57	62.5	30	34	51.5	5.4	15.4	55	2.3	33.5	189	*204
HAWE3000	1/4~3/8	53	215	92.5	65	65.5	39	40	44.5	6.5	8	53	2.3	42.5	223	
HAWE4000	3/8~1/2	70	264	112	81	78.5	49.2	54	53.5	8.5	10.5	70	2.3	52.5	262	
HAWE4000-06	3/4	75	269	114	81	78.5	49.2	54	55.5	8.5	10.5	70	2.3	52.5	266	
HAWE5000	3/4~1	90	348	116	90	80.5	49.2	54	62	8.5	10.5	70	3.2	52.5	343	

*标注标尺寸为杠杆式自动放水器高度尺寸。/*This size is for lever type auto drain.

HACE系列气源处理元件/HACE Series Air Preparation Units

HACE系列嵌入式压力开关气源处理元件/ HACE Series Embedded Pressure Switch Air Preparation Units

EP30-1-003
嵌入式压力开关
Embedded Pressure Switch

型号命名方法/How To Order

HA C EP 3000 - 03 M D - 003

- ●HA (HA系列杯体和放水结构) HA series cup structure
- △HNA (金属杯系列杯体和放水结构) HNA series cup structure
- △A(普通的杯体和放水结构) A series cup structure

●标准配置/Standard
△可选配置/Optional

功能/Function
- R: 减压阀(Regulator)
- W: 过滤减压阀 (Filter Regulator)
- C: 二联件(FR+L)
- C: 三联件(F+R+L)

EP: 嵌入式压力开关 Embedded pressure switch

2000	01~02(1/8~1/4)
3000	02~03(1/4~3/8)
4000	03~06(3/8~3/4)
5000	06~10(3/4~1)

- 无: 标准 No: Standard
- M: 金属杯 Metal cup

- 无: 标准 No: Standard
- D: 自动排水 Auto drain

嵌入式压力开关输出信号/Embedded pressure switch output ：
输出规格/Output specifications

标准系列/Standard	001	2NPN
	002	2PNP
	003	1NPN+1PNP
	010	2NPN+1模拟输出/Analog output(1~5V)
	011	2NPN+1模拟输出/Analog output(4~20mA)
	012	1NPN+1PNP+1模拟输出/Analog output(1~5V)
	020	2PNP+1模拟输出/Analog output(1~5V)
	021	2PNP+1模拟输出/Analog output(4~20mA)
	030	1NPN+1RS485
	031	1PNP+1RS485
定制系列 Customized	000	定制规格/Custom Specifications

1NPN+1PNP+1□□□□/Analog output(1~5V)

特性/Features

- 三色双画面显示，显示更清晰，设置更方便
  Three-color dual-screen display, the display is clearer, more convenient to set up
- 业界最快开关控制速度，独有Super speed模式，响应速度仅需1ms
  The industry's fastest switch control speed, unique Super speed mode, response speed of only 1ms；
- 可设定多种压力显示单位：kPa MPa kgf/cm² bar psi
  A variety of pressure display units can be set: kPa MPa kgf/cm² bar psi
- MODBUS协议支持最多可支持32个表进行通讯
  The MODBUS protocol supports communication of up to 32 Pressure Switch
- 高达2000万次以上的压力冲击和开关量可靠性测试
  Up to 20 million pressure impact and switching reliability tests

HDA气源处理组合元件(三联件)/HDA Series Combination Unit(F+R+L)
HDAC20~40系列/Series

特性/Features

- 采用模块化设计，外形美观，结构紧凑，防震性好。
- 罩壳采用透明材质，可视性好，杯体内部360度目视确认。
- 采用手柄调节，滴油量的调节更加轻松灵敏。
- HDAL30~40可不停气加油。
- Adopting modular design, it has a nice appearance, compact structure, and good shock resistance.
- The cover is made of transparent material with good visibility, and the interior of the cup can be visually confirmed 360 degrees.
- Using a handle for adjustment, the adjustment of oil drop volume is easier and more sensitive.
- HDAL30~40 can refuel continuously in working condition.

符号/Symbol

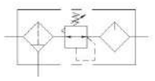

型号命名方法/How To Order

HDAC E 30 - 03 D - □ - □

- HDAC：HDA系列气源过滤组合三联件 HDA Series Combination Unit (F+R+L)
- E：
  - 无：双盖板 NO: Double cover plate
  - E：方形压力表 Square gauge
  - G：圆形压力表 Round (Normal) gauge
  - EP：嵌入式压力开关 Embedded Pressure switch
- 30：规格 Body Size — 20 / 30 / 40
- 03：接口螺纹 Port Size — 01(1/8) / 02(1/4) / 03(3/8) / 04(1/2)
- D：
  - 无: 标准 No: Standard
  - D: 自动排水 Auto drain
- □：
  - 无：聚碳酸酯杯体及防护罩 No: Polycarbonate cup and protective cover
  - 1：A系列杯体防护罩 A series cup and protective cover
  - 2：HA系列杯体防护罩 HA series cup and protective cover
  - 3：金属杯体，金属杯B款为3B Metal cup, TYPE B metal cup is 3B.
- □：
  - 无：标准 No：Standard
  - EP信号输出方式：如003，具体见P47页 EP signal output method: for example 003, see page 47 for details

例：
1.HDAC30-03：双盖板、聚碳酸酯杯体及防护罩，停气放水的3/8口径30三联件。
2.HDACE30-03D-1：方形压力表、A系列杯体防护罩、自动放水的3/8口径30三联件。
3.HDACEP30-03D-3-003：003规格压力开关、金属杯体带自动放水的3/8口径30三联件。

For example:
1.HDAC30-03:The F+R+L combination of port size 3/8" with double cover plate、polycarbonate cup and protective cover, air shutoff drain.
2.HDACE30-03D-1: The F+R+L combination of port size 3/8" with square gauge (Embedded)、A series cup and protective cover, auto drain.
3.HDACEP30-03D-3-003: The F+R+L combination of port size 3/8"with 003 pressure switch、metal cup and auto drain.

规格/Specification

型号/Model	HDAC20-01	HDAC20-02	HDAC30-02	HDAC30-03	HDAC40-03	HDAC40-04
口径/Port Size	1/8	1/4	1/4	3/8	3/8	1/2
最高使用压力/Highest Working Pressure	1.0MPa					
工作介质/Working Medium	初级过滤的压缩空气 /Compressed air					
环境温度或流体温度/Ambient and Fluid Temperature	5~60℃					
安装方式/Installation method	管式安装或支架安装/Pipe installation or bracket installation					
安装位置/Installation position	垂直方向±5°/Vertical±5°					
调压范围/Pressure Regulating Range	0.05~0.85MPa					
过滤精度/Filter Precision	25μm(5μm、50μm可选/available)					
滤芯材质/Filter element material	铜珠烧结(PE可选)/Brass (PE available)					
最小起雾流量/Minimum oil mist flow rate	15L/min		40L/min		50L/min	
推荐使油/Recommended Oil Use	透平1号油 /Turbine No.1 Oil (ISOVG32)					
容器材料/Container Material	聚碳酸酯/Polycarbonate					
容器保护罩/Protective Cover	无/No		聚碳酸酯/Polycarbonate			
放水功能/Drain Function	手动放水/Manual drain		停气放水(自动放水可选)/Air shutoff drain (auto drain available)			

外形尺寸图/Overall Dimension Drawing(mm)

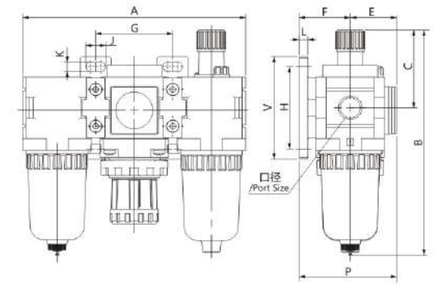

HDAC20

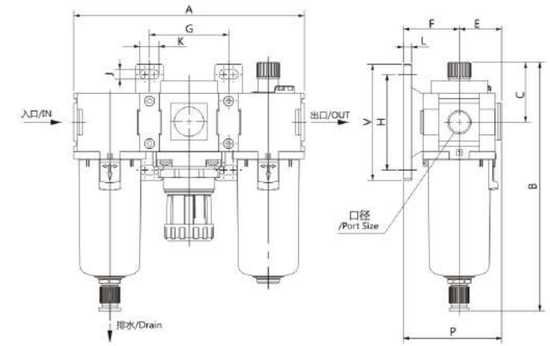

HDAC30~40

型号/Model	口径/Port Size	A	B	C	E	F	G	H	J	K	L	P	V
HDAC20	1/8, 1/4	130	132	46	27	30	45	48	5.5	11.5	5	57	60
HDAC30	1/4, 3/8	169	185	45	31.5	41	58	70	7	14	6	72.5	85
HDAC40	3/8, 1/2	220	217	52	40	50	75	80	9	18	7	90	100

流量特性曲线/ Characteristic Curve of Flow Rate

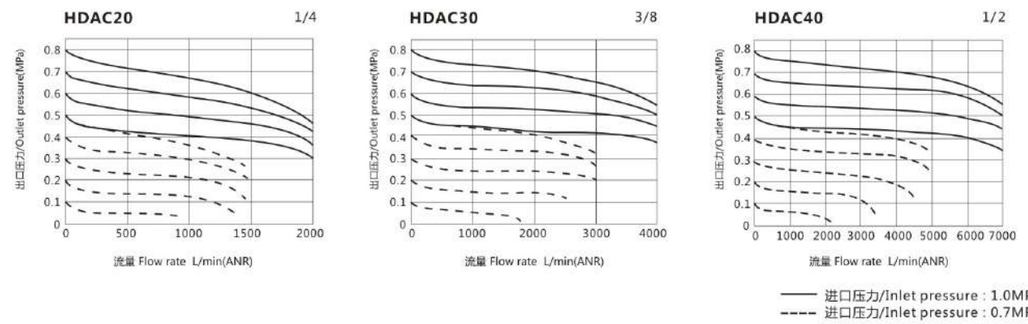

压力特性曲线/Characteristic Curve of Pressure

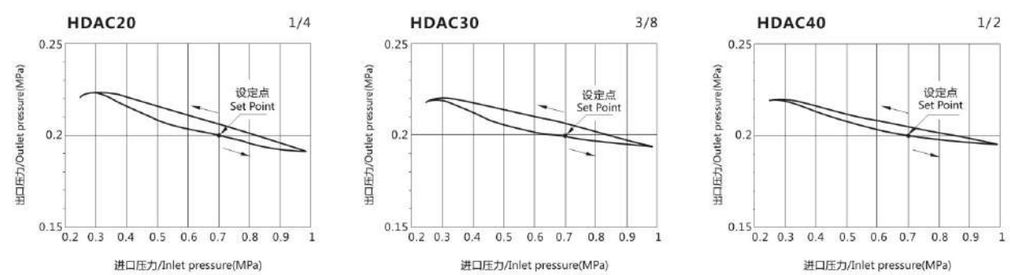

进口压力/Inlet pressure : 0.7MPa　出口压力/Outlet pressure : 0.2MPa　流量/Flow rate : 20L/min(ANR)

HDA系列气源处理组合元件(二联件)/HDA Series Combination Unit(FR+L)
HDAC20~40A系列/Series

特性/Features

- 采用模块化设计，外形美观，结构紧凑，防震性好。
- 罩壳采用透明材质，可视性好，杯体内部360度目视确认。
- 采用手柄调节，滴油量的调节更加轻松灵敏。
- HDAL30~40可不停气加油。
- Adopting modular design, it has a nice appearance, compact structure, and good shock resistance.
- The cover is made of transparent material with good visibility, and the interior of the cup can be visually confirmed 360 degrees.
- Using a handle for adjustment, the adjustment of oil drop volume is easier and more sensitive.
- HDAL30~40 can refuel continuously in working condition.

符号/Symbol

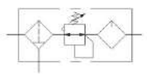

型号命名方法/How To Order

HDAC E 30 A - 03 D - □ - □

HDA系列二联件 HDA Series (FR+L)	无：双盖板 NO: Double cover plate E：方形压力表 Square gauge G：圆形压力表 Round (Normal) gauge EP：嵌入式压力开关 Embedded Pressure switch	规格 Body Size 20 30 40 二联件（FR+L）	接口螺纹 Port Size 01(1/8) 02(1/4) 03(3/8) 04(1/2)	无：标准 No: Standard D：自动排水 Auto drain	无：聚碳酸酯杯体及防护罩 No: Polycarbonate cup and protective cover 1：A系列杯体防护罩 A series cup and protective cover 2：HA系列杯体防护罩 HA series cup and protective cover 3：金属杯体，金属杯B款为3B Metal cup, TYPE B metal cup is 3B.	无：标准 No：Standard EP信号输出方式：如003，具体见P47页 EP signal output method: for example 003, see page 47 for details

例：
1.HDAC30A-03：双盖板、聚碳酸酯杯体及防护罩，停气放水的3/8口径30二联件。
2.HDACE30A-03D-1：方形压力表、A系列杯体防护罩、自动放水的3/8口径30二联件。
3.HDACEP30A-03D-3-003：003规格压力开关、金属杯体带自动放水的3/8口径30二联件。

For example:
1.HDAC30A-03: The FR+L combination of port size 3/8" with double cover plate、polycarbonate cup and protective cover, air shutoff drain
2.HDACE30A-03D-1: The FR+L combination of port size 3/8" with square gauge (Embedded)、A series cup and protective cover, auto drain.
3.HDACEP30A-03D-3-003: The FR+L combination of port size 3/8" with 003 pressure switch、metal cup and auto drain.

规格/Specification

型号/Model	HDAC20A-01	HDAC20A-02	HDAC30A-02	HDAC30A-03	HDAC40A-03	HDAC40A-04
口径/Port Size	1/8	1/4	1/4	3/8	3/8	1/2
最高使用压力/Highest Working Pressure	1.0MPa					
工作介质/Working Medium	初级过滤的压缩空气 /Compressed air					
环境温度或流体温度/Ambient and Fluid Temperature	5~60℃					
安装方式/Installation method	管式安装或支架安装/Pipe installation or bracket installation					
安装位置/Installation position	垂直方向±5°/Vertical±5°					
调压范围/Pressure Regulating Range	0.05~0.85MPa					
过滤精度/Filter Precision	25μm(5μm、50μm可选/available)					
滤芯材质/Filter element material	铜珠烧结(PE可选)/Brass (PE available)					
最小起雾流量/Minimum oil mist flow rate	15L/min		40L/min		50L/min	
推荐使油/Recommended Oil Use	透平1号油 /Turbine No.1 Oil (ISOVG32)					
容器材料/Container Material	聚碳酸酯/Polycarbonate					
容器保护罩/Protective Cover	无/No		聚碳酸酯/Polycarbonate			
放水功能/Drain Function	手动放水/Manual drain		停气放水(自动放水可选)/Air shutoff drain (auto drain available)			

外形尺寸图/Overall Dimension Drawing(mm)

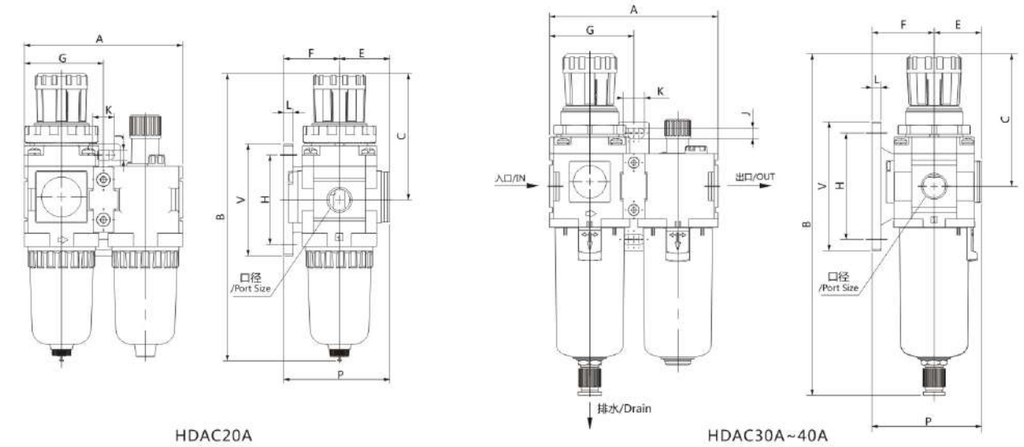

HDAC20A　　HDAC30A~40A

型号/Model	口径/Port Size	A	B	C	E	F	G	H	J	K	L	P	V
HDAC20A	1/8, 1/4	85	157	70.5	27	30	42.5	48	5.5	11.5	5	57	60
HDAC30A	1/4, 3/8	111	231	91	31.5	41	55.5	70	7	14	6	72.5	85
HDAC40A	3/8, 1/2	145	264	100	40	50	72.5	80	9	18	7	90	100

HDA系列过滤器/HDA Series Air Filter
HDAF20~40系列/Series

特性/Features

- 采用模块化设计，外形美观，结构紧凑，防震性好。
- 罩壳采用透明材质，可视性好，杯体内部360度目视确认。
- Adopting modular design, it has a nice appearance, compact structure, and good shock resistance.
- The cover is made of transparent material with good visibility, and the interior of the cup can be visually confirmed 360 degrees.

符号/Symbol

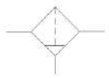

型号命名方法/How To Order

HDAF 30 - 03 D - □

HDAF系列过滤器
HDA Series Air Filter

规格
Body Size

20
30
40

接口螺纹
Port Size

01(1/8)
02(1/4)
03(3/8)
04(1/2)

无: 标准
No: Standard

D: 自动排水
Auto drain

无：聚碳酸酯杯体及防护罩
No: Polycarbonate cup and protective cover

1：A系列杯体防护罩
A series cup and protective cover

2：HA系列杯体防护罩
HA series cup and protective cover

3：金属杯体，金属杯B款为3B
Metal cup, TYPE B metal cup is 3B.

例：
1.HDAF30-03：聚碳酸酯杯体及防护罩，停气放水的3/8口径30过滤器。
2.HDAF30-03D-1：A系列杯体防护罩、自动放水的3/8口径30过滤器。

For example:
1.HDAF30-03：Air filter of 3/8" with polycarbonate cup and protective cover, air shutoff drain.
2.HDAF30-03D-1：Air filter of 3/8" with A series cup and protective cover, auto drain.

规格/Specification

型号/Model	HDAF20-01	HDAF20-02	HDAF30-02	HDAF30-03	HDAF40-03	HDAF40-04
口径/Port Size	1/8	1/4	1/4	3/8	3/8	1/2
最高使用压力/Highest Working Pressure	1.0MPa					
工作介质/Working Medium	初级过滤的压缩空气 /Compressed air					
环境温度或流体温度/Ambient and Fluid Temperature	5~60℃					
最低使用压力/Minimum Working pressure	0.15MPa					
安装方式/Installation method	管式安装或支架安装/Pipe installation or bracket installation					
安装位置/Installation position	垂直方向±5°/Vertical±5°					
过滤精度/Filter Precision	25μm(5μm、50μm可选/available)					
滤芯材质/Filter element material	铜珠烧结(PE可选)/Brass (PE available)					
容器材料/Container Material	聚碳酸酯/Polycarbonate					
容器保护罩/Protective Cover	无/NO		聚碳酸酯/Polycarbonate			
放水功能/Drain Function	手动放水/Manual drain		停气放水(自动放水可选)/Air shutoff drain (auto drain available)			

外形尺寸图/Overall Dimension Drawing(mm)

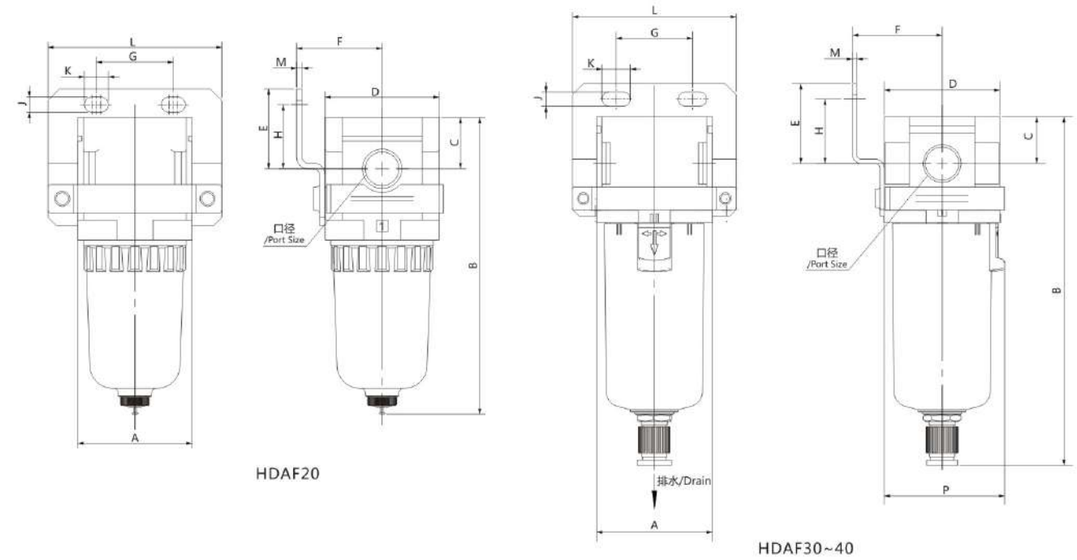

HDAF20

HDAF30~40

型号/Model	口径/Port Size	A	B	C	D	E	F	G	H	J	K	L	M	P
HDAF20	1/8, 1/4	40	104	18	40	28	30	27	22.5	5.4	8.4	61	2	-
HDAF30	1/4, 3/8	53	160	21.5	53	36.5	41	35	29.5	6.5	13	75	2	55
HDAF40	3/8, 1/2	70	192	25.5	70	39	50	52	30	8.5	12.5	92	2	73

流量特性曲线/ Characteristic Curve of Flow Rate

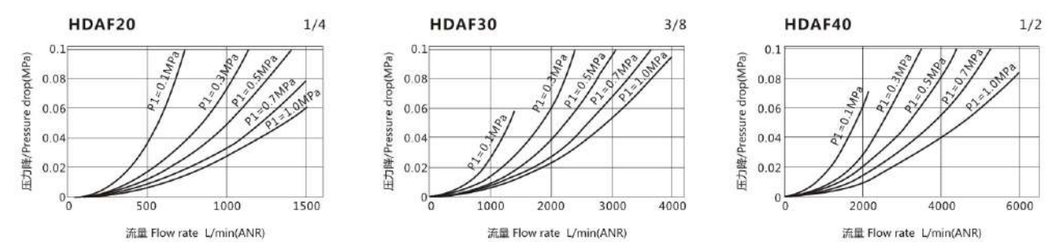

HDA系列减压阀/HDA Series Air Regulator
HDAR20~40系列/Series

特性/Features

- 采用模块化设计，外形美观，结构紧凑，防震性好。
- Adopting modular design, it has a nice appearance, compact structure, and good shock resistance.

符号/Symbol

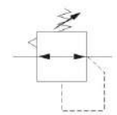

型号命名方法/How To Order

HDAR E 30 □ - 03 - □

- HDAR：HDA系列减压阀 HDA Series Air Regulator
- E：
  - 无：双盖板 NO: Double cover plate
  - E：方形压力表 Square gauge
  - G：圆形压力表 Round (Normal) gauge
  - EP：嵌入式压力开关 Embedded Pressure switch
- 30：规格 Body Size
  - 20
  - 30
  - 40
- □：
  - 无：标准 No：Standard
  - K：快速逆流 with Backflow Function
- 03：接口螺纹 Port Size
  - 01(1/8)
  - 02(1/4)
  - 03(3/8)
  - 04(1/2)
- □：
  - 无：标准 No：Standard
  - EP信号输出方式：如003，具体见P47页 EP signal output method: for example 003, see page 47 for details

例：
1.HDAR30-03：双盖板的3/8口径30减压阀。
2.HDARE30-03K：方形压力表、带快速溢流功能的3/8口径30减压阀。
3.HDAREP30-03-003：003规格压力开关的3/8口径30减压阀。

For example:
1.HDAR30-03：Air regulator of 3/8" with double cover plate.
2.HDARE30-03K：Air regulator of 3/8" with square gauge and backflow function.
3.HDAREP30-03-003：Air regulator of 3/8" with 003 pressure switch.

规格/Specification

型号/Model	HDAR20-01	HDAR20-02	HDAR30-02	HDAR30-03	HDAR40-03	HDAR40-04
口径/Port Size	1/8	1/4	1/4	3/8	3/8	1/2
最高使用压力/Highest Working Pressure	1.0MPa					
工作介质/Working Medium	初级过滤的压缩空气 /Compressed air					
环境温度或流体温度/Ambient and Fluid Temperature	5~60℃					
安装方式/Installation method	管式安装或支架安装/Pipe installation or bracket installation					
安装位置/Installation position	垂直方向±5°/Vertical±5°					
调压范围/Pressure Regulating Range	0.05~0.85MPa					
阀型/Valve Type	带溢流型/With Overflow					

外形尺寸图/Overall Dimension Drawing(mm)

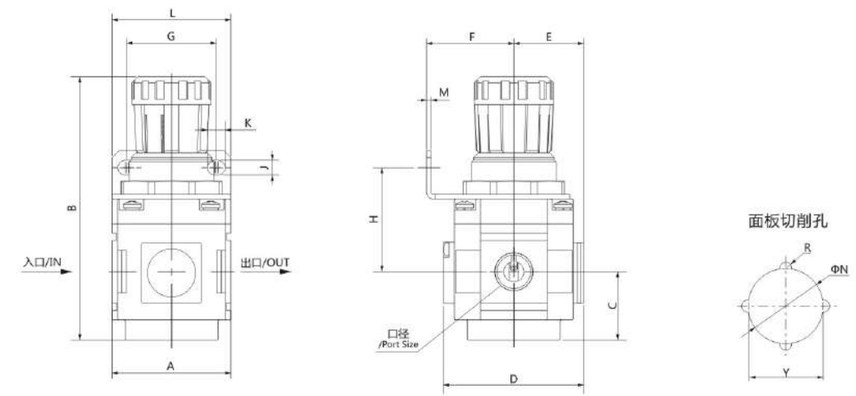

型号/Model	口径/Port Size	A	B	C	D	E	F	G	H	J	K	L	M	N	Y	R
HDAR20	1/8, 1/4	40	95.5	25	54.5	27	30	34	48	5.4	15.4	55	2	30.5	29.8	2.6
HDAR30	1/4, 3/8	53	122	30.5	62.5	31.5	39	40	46.5	6.5	8	53	2	38.5	38	3
HDAR40	3/8, 1/2	70	133	33	80.5	40	49.5	54	56.7	8.5	10.5	70	2	42.5	42	3

流量特性曲线/ Characteristic Curve of Flow Rate

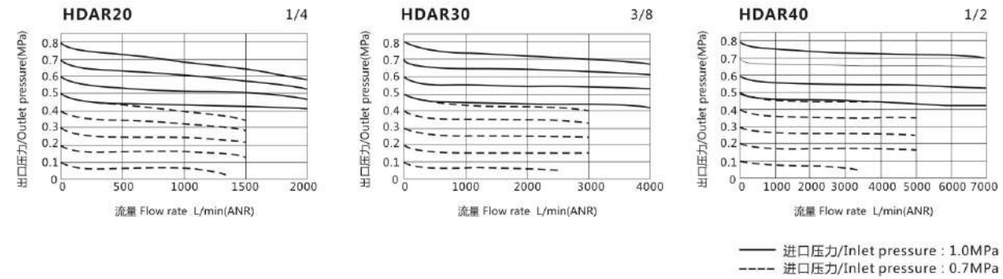

压力特性曲线/Characteristic Curve of Pressure

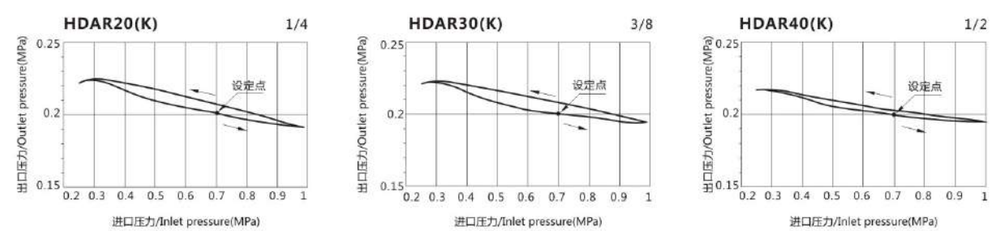

进口压力/Inlet pressure : 0.7MPa　出口压力/Outlet pressure : 0.2MPa　流量/Flow rate : 20L/min(ANR)

HDA系列油雾器/HDA Series Air Lubricator
HDAL20~40系列/Series

特性/Features

- 采用模块化设计，外形美观，结构紧凑，防震性好。
- 罩壳采用透明材质，可视性好，杯体内部360度目视确认。
- 采用手柄调节，滴油量的调节更加轻松灵敏。
- HDAL30~40可不停气加油。
- Adopting modular design, it has a nice appearance, compact structure, and good shock resistance.
- The cover is made of transparent material with good visibility, and the interior of the cup can be visually confirmed 360 degrees.
- Using a handle for adjustment, the adjustment of oil drop volume is easier and more sensitive.
- HDAL30~40 can refuel continuously in working condition.

符号/Symbol

型号命名方法/How To Order

HDAL 30 - 03 - □

HDA系列油雾器
HDA Series Air Lubricator

规格 Body Size
20
30
40

接口螺纹 Port Size
01(1/8)
02(1/4)
03(3/8)
04(1/2)

无：聚碳酸酯杯体及防护罩 No: Polycarbonate cup and protective cover
1：A系列杯体防护罩 A series cup and protective cover
2：HA系列杯体防护罩 HA series cup and protective cover
3：金属杯体，金属杯B款为3B Metal cup, TYPE B metal cup is 3B.

例：
1.HDAL30-03：聚碳酸酯杯体及防护罩的3/8口径30油雾器。
2.HDAL30-03-1：A系列杯体防护罩的3/8口径30油雾器。

For example:
1.HDAL30-03：Air lubricator of 3/8" with polycarbonate cup and protective cover
2.HDAL30-03-1：Air lubricator of 3/8" with A series cup and protective cover.

规格/Specification

型号/Model	HDAL20-01	HDAL20-02	HDAL30-02	HDAL30-03	HDAL40-03	HDAL40-04
口径/Port Size	1/8	1/4	1/4	3/8	3/8	1/2
最高使用压力/Highest Working Pressure	1.0MPa					
工作介质/Working Medium	初级过滤的压缩空气 /Compressed air					
环境温度或流体温度/Ambient and Fluid Temperature	5~60℃					
安装方式/Installation method	管式安装或支架安装/Pipe installation or bracket installation					
安装位置/Installation position	垂直方向±5°/Vertical±5°					
最小起雾流量/Minimum oil mist flow rate	15L/min		40L/min		50L/min	
推荐使油/Recommended Oil Use	透平1号油 /Turbine No.1 Oil (ISOVG32)					
容器材料/Container Material	聚碳酸酯/Polycarbonate					
容器保护罩/Protective Cover	无/No		聚碳酸酯/Polycarbonate			

外形尺寸图/Overall Dimension Drawing(mm)

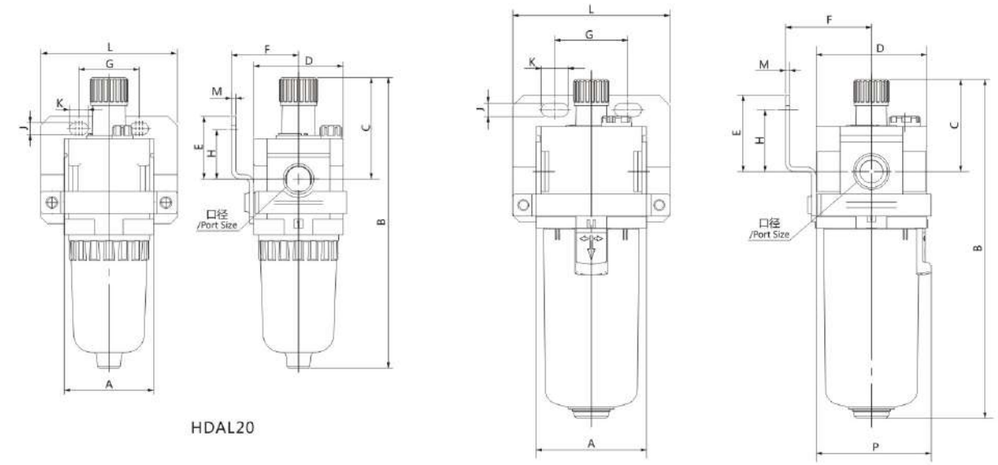

HDAL20

HDAL30~40

型号/Model	口径/Port Size	A	B	C	D	E	F	G	H	J	K	L	M	P
HDAL20	1/8, 1/4	40	130	45.5	40	28	30	27	22.5	5.4	8.4	61	2	-
HDAL30	1/4, 3/8	53	163	45	53	36.5	41	35	29.5	6.5	13	75	2	55
HDAL40	3/8, 1/2	70	196	52	70	39	50	52	30	8.5	12.5	92	2	73

流量特性曲线/ Characteristic Curve of Flow Rate

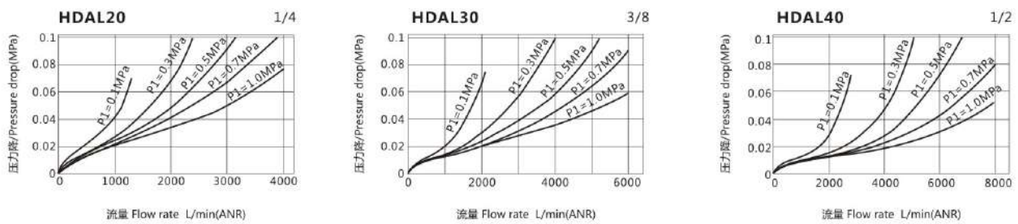

HDA系列过滤减压阀/HDA Series Filter Regulator
HDAW20~40系列/Series

特性/Features

- 采用模块化设计，外形美观，结构紧凑，防震性好。
- 罩壳采用透明材质，可视性好，杯体内部360度目视确认。
- Adopting modular design, it has a beautiful appearance, compact structure, and good shock resistance.
- The cover is made of transparent material with good visibility, and the interior of the cup can be visually confirmed 360 degrees.

符号/Symbol

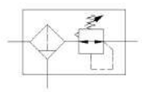

型号命名方法/How To Order

HDAW E 30 □ - 03 D - □ - □

- HDAW：HDA系列过滤压阀 HDA Series Filter Regulator
- E：无：双盖板 NO: Double cover plate；E：方形压力表 Square gauge；G：圆形压力表 Round (Normal) gauge；EP：嵌入式压力开关 Embedded Pressure switch
- 30：规格 Body Size：20、30、40
- □：无：标准 No: Standard；K：快速逆流
- 03：接口螺纹 Port Size：01(1/8)、02(1/4)、03(3/8)、04(1/2)
- D：无：标准 No: Standard；D: 自动排水 Auto drain
- □：无：聚碳酸酯杯体及防护罩 No: Polycarbonate cup and protective cover；1：A系列杯体防护罩 A series cup and protective cover；2：HA系列杯体防护罩 HA series cup and protective cover；3：金属杯体，金属杯B款为3B Metal cup, TYPE B metal cup is 3B.
- □：无：标准 No：Standard；EP信号输出方式：如003，具体见P47页 EP signal output method: for example 003, see page 47 for details

例：
1.HDAW30-03：双盖板的3/8口径30过滤减压阀。
2.HDAWE30-03K：方形压力表、带快速溢流功能的3/8口径30过滤减压阀。
3.HDAWEP30-03-003：003规格压力开关的3/8口径30过滤减压阀。

For example:
1.HDAW30-03：Filter Regulator of 3/8" with double cover plate.
2.HDAWE30-03K：Filter Regulator of 3/8" with square gauge and backflow function.
3.HDARWP30-03-003：Filter Regulatorr of 3/8" with 003 pressure switch.

规格/Specification

型号/Model	HDAW20-01	HDAW20-02	HDAW30-02	HDAW30-03	HDAW40-03	HDAW40-04
口径/Port Size	1/8	1/4	1/4	3/8	3/8	1/2
最高使用压力/Highest Working Pressure	1.0MPa					
工作介质/Working Medium	初级过滤的压缩空气 /Compressed air					
环境温度或流体温度/Ambient and Fluid Temperature	5~60℃					
安装方式/Installation method	管式安装或支架安装/Pipe installation or bracket installation					
安装位置/Installation position	垂直方向±5°/Vertical±5°					
调压范围/Pressure Regulating Range	0.05~0.85MPa					
过滤精度/Filter Precision	25μm(5μm、50μm可选/available)					
滤芯材质/Filter element material	铜珠烧结(PE可选)/Brass (PE available)					
容器材料/Container Material	聚碳酸酯/Polycarbonate					
容器保护罩/Protective Cover	无/No		聚碳酸酯/Polycarbonate			
放水功能/Drain Function	手动放水/Manual drain		停气放水(自动放水可选)/Air shutoff drain (auto drain available)			

外形尺寸图/Overall Dimension Drawing(mm)

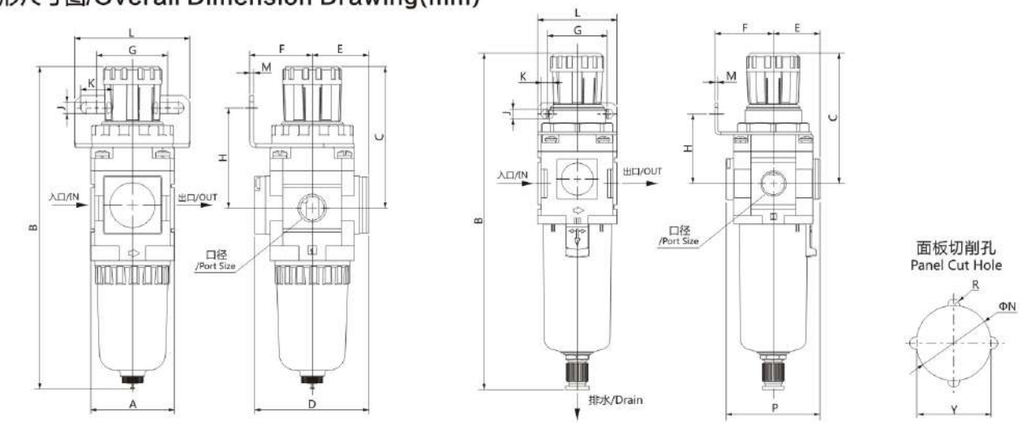

HDAW20　　HDAW30~40

型号/Model	口径/Port Size	A	B	C	D	E	F	G	H	J	K	L	M	N	Y	R
HDAW20	1/8, 1/4	40	157	70.5	54.5	27	30	34	48	5.4	15.4	55	2	30.5	29.8	2.6
HDAW30	1/4, 3/8	53	231	91	62.5	31.5	39	40	46.5	6.5	8	53	2	38.5	38	3
HDAW40	3/8, 1/2	70	264	100	80.5	40	49.5	54	56.7	8.5	10.5	70	2	42.5	42	3

流量特性曲线/ Characteristic Curve of Flow Rate

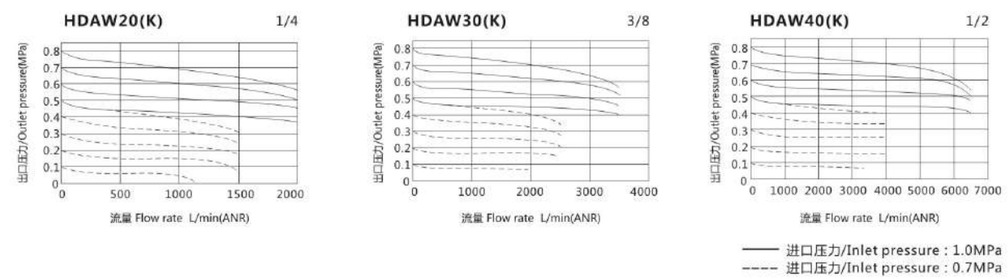

压力特性曲线/Characteristic Curve of Pressure

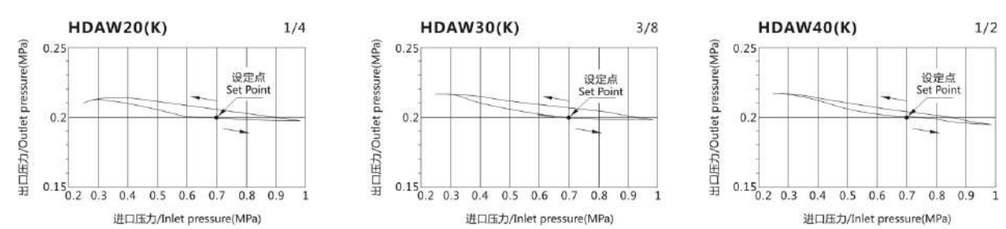

进口压力/Inlet pressure : 0.7MPa　出口压力/Outlet pressure : 0.2MPa　流量20L/min(ANR)

HDA系列油雾分离器/HDA Series Mist Separator
HDAFM30~40系列/Series

型号命名方法/How To Order

HDAFM 30 - 03 D - □

- HDAFM: HD系列油雾分离器 HDA Series Mist Separator
- 30: 规格 Body Size — 30, 40
- 03: 接口螺纹 Port Size — 02(1/4), 03(3/8), 04(1/2)
- D: 无: 标准 No: Standard; D: 自动排水 Auto drain
- □:
  - 无：聚碳酸酯杯体及防护罩 No: Polycarbonate cup and protective cover
  - 1：A系列杯体防护罩 A series cup and protective cover
  - 2：HA系列杯体防护罩 HA series cup and protective cover
  - 3：金属杯体，金属杯B款为3B Metal cup, TYPE B metal cup is 3B.

符号/Symbol

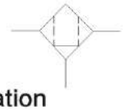

规格/Specification

型号/Model	HDAFM30		HDAFM40	
连接口径/Port Size	1/4	3/8	3/8	1/2
工作介质/Working Medium	初级过滤的压缩空气 /Compressed air			
环境温度或流体温度/Ambient and Fluid Temperature	5~60℃			
最高使用压力/Highest Working Pressure	1.0MPa			
最低使用压力/Minimum Working Pressure	0.15MPa			
过滤精度/Filter Precision	0.3μm			
最大处理空气量注1) Maximum air processing capacity Note 1)	450L/min		1100L/min	
水杯容量/Bowl Caapacity	20cm²		45cm²	
容器材料/Container Material	聚碳酸酯/Polycarbonate			
容器保护罩/Protective Cover	聚碳酸酯/Polycarbonate			
重量/Weight	0.281kg		0.495kg	

注1：进口压力为0.7MPa、20℃，大气压相对湿度65%时的流量。最大处理空气流量根据进口压力变化而变化。若流量超过最大处理空气流量，油会从出口侧流出。
Note 1: Flow rate at an inlet pressure of 0.7MPa, 20 ℃, and a relative humidity of 65% in atmosphere . The maximum processing air flow rate varies according to different inlet pressure. If the flow rate exceeds the maximum processing air flow rate, oil will flow out from the outlet side.

外形尺寸图/Overall Dimension Drawing(mm)

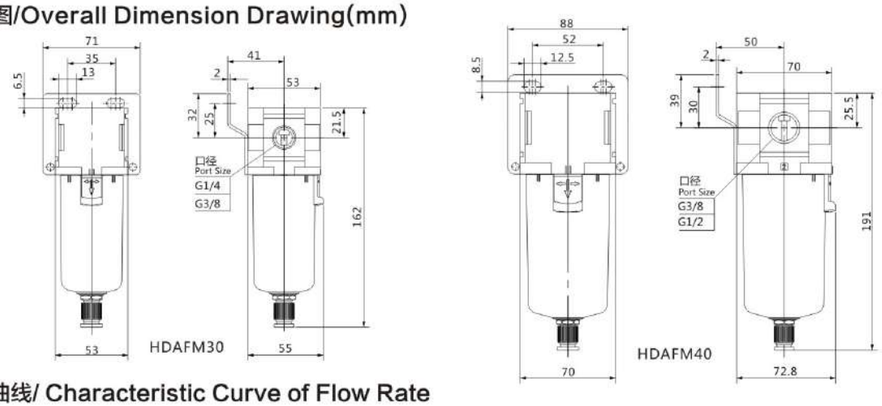

流量特性曲线/ Characteristic Curve of Flow Rate

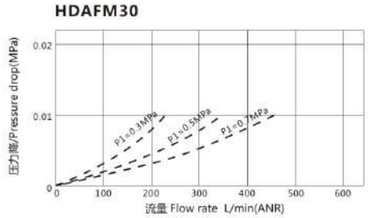

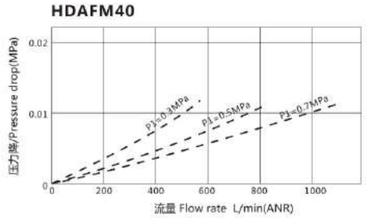

HL系列气源处理组合元件(三联件)/HL Series Combination Unit(F+R+L)
HLC20~40系列/Series

符号/Symbol

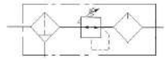

型号命名方法 How To Order

HLC 20 - 02 D

- HLC: 系列号 series; 三联件 /F+R+L
- 20: 规格 Body Size — 20, 30, 40
- 02: 接口螺纹 Pore Size — 01(1/8), 02(1/4), 03(3/8), 04(1/2), 06(3/4), 10(1)
- D: 无: 标准 No: Standard; D: 自动排水 Auto drain

特性/Features

能滤除上游空气中的污物、管垢、铁锈及冷凝水；在特别要求的场合，5um滤芯可以很容易替换40μm标准滤芯；即使因输入压力和压缩空气消耗产生系统波动，也能保证其设定的工作压力非常稳定；自动可变节流式油雾器，可均匀地向压缩空气喷油雾；在工作中可实现不停气加油。可通过调节螺钉调节滴油量，常规每1000L空气中含有1-12滴油就足够。

This series products can filter the upper air of dirt, scale, rust and condensate; In special occasions, 40μm standard filter element can be easily replaced by 5μm filter element. Even If the system fluctuates due to input pressure and compressed air consumption, this ensures that the set working pressure is very stable. Automatic Variable throttling oil mist dispenser for uniform compressed air spray. The oil can be filled with pressure non-stop. The flow rate of oil can be adjusted by adjusting the screw. 1-12 drops of oil per 1000L of air is enough.

规格/Specification

最高使用压力/Highest Working Pressure	1.6MPa		
工作介质/Working Medium	初级过滤的压缩空气 /Compressed air		
结构特点/structural features	油雾型自动可变节流式/Oil mist type automatic variable throttling type		
环境及流体温度/Ambient and Fluid Temperature	5~60℃		
安装方式/Installation method	管式安装或支架安装/Pipe installation or bracket installation		
安装位置/Installation position	垂直方向±5°/Vertical±5°		
工作压力/working pressure	0.05-1.2MPa/0.05~0.7MPa		
建议用油/ Recommended Oil Use	油液牌号/Oil grade	Aral Vitam GF 32 BP Energol HLP32 Esso Nuto H32 Mobil dTE24 Shell Hydrol DO32	
	粘度/Viscosity	32mm²/s(=cst)温度为/at 40℃ ISOVG32 ISO3448标准/Standard	
过滤精度/Filter Precision	40μm(常规/Conventional)、5μm		
容器材料/Container Material	聚碳酸酯/Polycarbonate		
防护罩/Protective Cover	铝合金/Aluminum alloy		

型号 /Model		HLC20-01	HLC20-02	HLC20-03	HLC30-03	HLC30-04	HLC30-06	HLC40-06	HLC40-10
	手动放水型/Manual drain	HLC20-01	HLC20-02	HLC20-03	HLC30-03	HLC30-04	HLC30-06	HLC40-06	HLC40-10
	自动排水型/ Auto drain	HLC20-01D	HLC20-02D	HLC20-03D	HLC30-03D	HLC30-04D	HLC30-06D	HLC40-06D	HLC40-10D
注1)接管口径/Note 1)Port Size		G1/8	G1/4	G3/8	G3/8	G1/2	G3/4	G3/4	G1
注2)标准额定流量 /Note 2) Standard Rated Flow (L/min)	工作压力/Working Pressure 0.05~1.2MPa	700	1000	1200	2000	2600	2600	7000	8000
	工作压力/Working Pressure 0.05~0.7MPa	800	1300	1500	2500	2800	2800	8500	8700
最小起雾流量/Minimum oil flow rate(L/min)		3			6			10	
最大储油量/Largest oil storage(mL)		45			110			190	
重量/Weight(kg)		0.524			1.451			2.094	2.063
配件/ Accessories	安装支架/Mounting bracket	HFOE20			HFOE30				
	压力表/Pressure Gauge	G36-10-01			G46-10-02				

注1) 接管口径另有NPT螺纹可供选择。/Note 1) Rc and NPT thread are available.
注2) 输入压力1.0MPa，工作压力0.6MPa，压降为0.1MPa。 /Note 2) Inlet pressure is 1.0MPa, Working pressure is 0.6MPa, pressure drop is 0.1MPa.

外形尺寸图/Overall Dimension Drawing(mm)

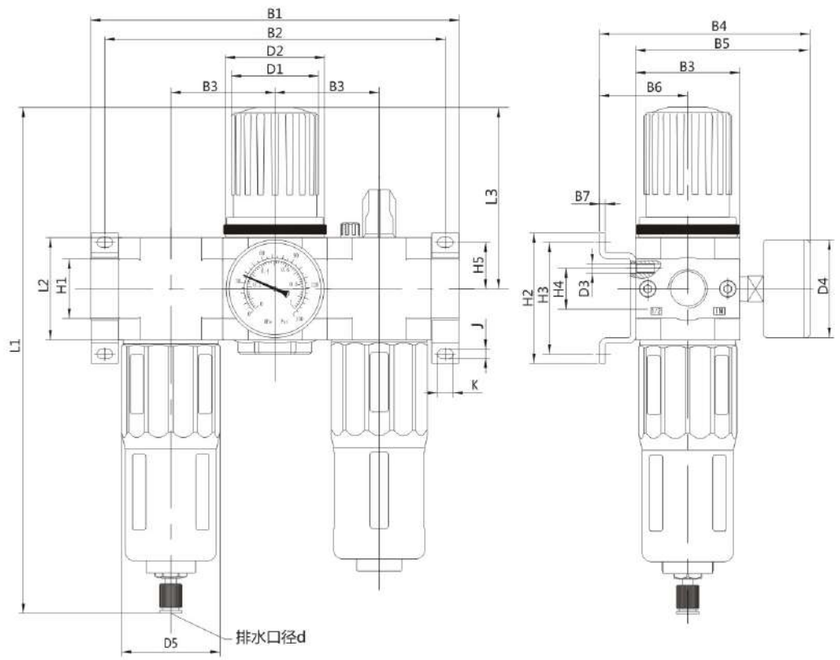

型号/Model	口径/Port Size(G)	B1	B2	B3	B4	B5	B6	B7	ΦD1	D2	D3	ΦD4
HLC20	G1/8~3/8	147	135	41	97	78	39	2	31	M36×1.5	M4深/Depth 7	42
HLC30	G3/8~3/4	198	183	56	113	94	47.5	3	47	M52×1.5	M5深/Depth 8	52.5
HLC40	G3/4~1	248	223	66	125	106	52	3	47	M52×1.5	M5深/Depth 8	52.5

型号/Model	ΦD5	H1	H2	H3	H4	H5	L1	L2	L3	Φd	J	K	L1 (带自动排水器) L1 (With Auto drain)
HLC20	38	20	43	35	11	17.5	213	40	69	6	4.3	8	204
HLC30	53	32	73	58	22	25	273	55	97.5	8	5.3	8.3	268
HLC40	64.5	32	73	58	22	25	296	66	103	8	5.3	8.3	289

HL系列气源处理组合元件(二联件)/HL Series Combination Unit(FR+L) HLC20~40系列/Series

符号/Symbol

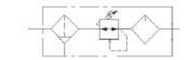

型号命名方法 How To Order

HL C 20 A - 02 D

- 系列号 series: HL
- 二联件 /FR+L: C
- 规格 Body Size: 20 / 30 / 40
- 接口螺纹 Pore Size: 01(1/8) / 02(1/4) / 03(3/8) / 04(1/2) / 06(3/4) / 10(1)
- 无: 标准 No: Standard / D: 自动排水 Auto drain

特性/Features

能滤除上游空气中的污物、管垢、铁锈及冷凝水；在特别要求的场合，5μm滤芯可以很容易替换40μm标准滤芯；即使因输入压力和压缩空气消耗产生系统波动，也能保证其设定的工作压力非常稳定；自动可变节流式油雾器，可均匀地向压缩空气喷油雾；在工作中可实现不停气加油。可通过调节螺钉调节滴油量，常规每1000L空气中含有1~12滴油就足够。

This series products can filter the upper air of dirt, scale, rust and condensate; In special occasions, 40μm standard filter element can be easily replaced by 5μm filter element. Even If the system fluctuates due to input pressure and compressed air consumption, this ensures that the set working pressure is very stable. Automatic Variable throttling oil mist dispenser for uniform compressed air spray. The oil can be filled with pressure non-stop. The flow rate of oil can be adjusted by adjusting the screw. 1-12 drops of oil per 1000L of air is enough.

规格/Specification

最高使用压力/Highest Working Pressure	1.6MPa			
工作介质 /Working Medium	初级过滤的压缩空气/Compressed air			
结构特点/ structural features	油雾型自动可变节流式/Oil mist type can be automatically throttles			
环境及流体温度 /Ambient and Fluid Temperature	5~60℃			
安装方式/Installation method	管式安装或支架安装/Pipe installation or bracket installation			
安装位置/Installation position	垂直方向±5°/Vertical±5°			
工作压力/working pressure	0.05-1.2MPa/0.05~0.7MPa			
建议用油/Recommended Oil Use	油液牌号/Oil grade	Aral Vitam GF 32 Mobil DTE24	BP Energol HLP32 Shell Hydrol DO32	Esso Nuto H32
	粘度/Viscosity	32mm²/s(=cst)温度为/at 40℃ ISOVG32 ISO3448标准/Standard		
过滤精度/Filter Precision	40um(常规/conventional)、5μm			
容器材料/Container Material	聚碳酸酯/Polycarbonate			
防护罩/Protective Cover	铝合金/Aluminum alloy			

型号/Model	手动放水型/Manual drain	HLC20A-01	HLC20A-02	HLC20A-03	HLC30A-03	HLC30A-04	HLC30A-06	HLC40A-06	HLC40A-10
	自动排水型/ Auto drain	HLC20A-01D	HLC20A-02D	HLC20A-03D	HLC30A-03D	HLC30A-04D	HLC30A-06D	HLC40A-06D	HLC40A-10D
注1)接管口径/Note 1)Port Size		G1/8	G1/4	G3/8	G3/8	G1/2	G3/4	G3/4	G1
注2)标准额定流量 /Note 2) Standard Ratde Flow (L/min)	工作压力/Working Pressure 0.05~1.2MPa	700	1000	1200	2000	2600	2600	7000	8000
	工作压力/Working Pressure 0.05~0.7MPa	800	1300	1500	2500	2800	2800	8500	8700
最小起雾流量/Minimum flow of fog(L/min)		3			6			10	
最大贮油量/Largest oil storage(mL)		45			110			190	
重量/Weight(kg)		0.455			1.131			1.6	1.568
配件 / Accessories	安装支架/Mounting bracket	HFOE20			HFOE30				
	压力表 /Pressure Gauge	G36-10-01			G46-10-02				

注1) 接管口径另有NPT螺纹可供选择。/Note 1) Rc and NPT thread are available.
注2) 输入压力1.0MPa，工作压力0.6MPa，压降为0.1MPa。 /Note 2) Inlet pressure is 1.0MPa, Working pressure is 0.6MPa, pressure drop is 0.1MPa.

外形尺寸图/ Overall Dimension Drawing(mm)

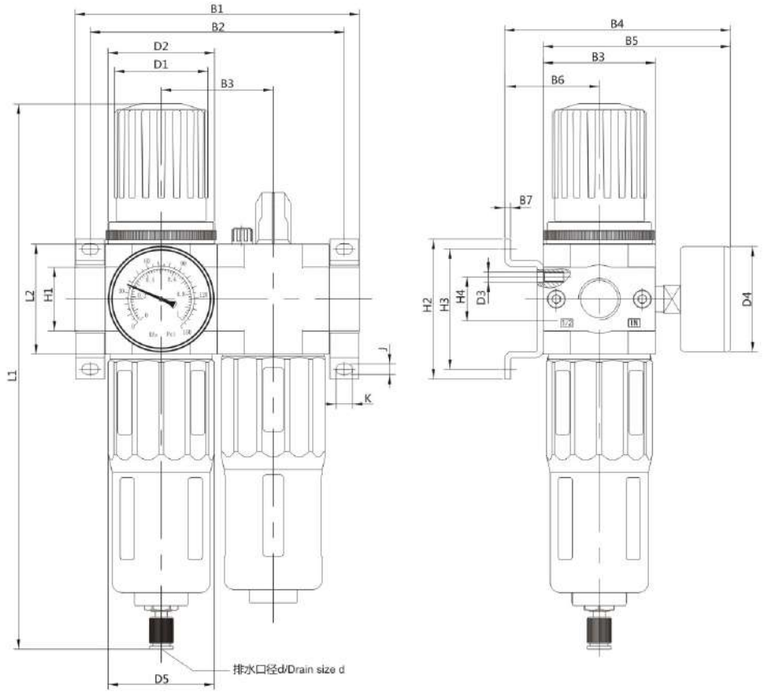

型号/Model	口径/Port Size(G)	B1	B2	B3	B4	B5	B6	B7	ΦD1	D2	D3	ΦD4
HLC20A	G1/8~3/8	106	92	41	97	78	39	2	31	M36×1.5	M4深/Depth 7	42
HLC30A	G3/8~3/4	142	127	56	113	94	47.5	3	47	M52×1.5	M5深/Depth 8	52.5
HLC40A	G3/4~1	182	157	66	125	106	52	3	47	M52×1.5	M5深/Depth 8	52.5

型号/Model	ΦD5	H1	H2	H3	H4	H5	L1	L2	L3	Φd	J	K	L1 (带自动排水器) L1 (With Auto drain)
HLC20A	38	20	43	35	11	17.5	213	40	69	6	4.3	8	204
HLC30A	53	32	73	58	22	25	273	55	97.5	8	5.3	8.3	268
HLC40A	64.5	32	73	58	22	25	296	66	103	8	5.3	8.3	289

HL系列空气过滤器/HL Series Air Filter HLF20~40系列/Series

符号/Symbol

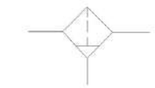

型号命名方法 How To Order

HL F 20 - 02 D

- HL: 系列号 series
- F: 过滤器/Filter
- 20: 规格 Body Size — 20, 30, 40
- 02: 接口螺纹 Port Size — 01(1/8), 02(1/4), 03(3/8), 04(1/2), 06(3/4), 10(1)
- D: 无: 标准 No: Standard; D: 自动排水 Auto drain

特性/Features

空气过滤器能滤除上游空气中的污物、管垢、铁锈及冷凝水。在特别要求的场合，5μm滤可以很容易替换40μm标准滤芯。

This series products can filter the upper air of dirt, scale, rust and condensate; In special occasions,40μm standard filter element can be easily replaced by 5μm filter element.

规格/Specification

最高使用压力/Highest Working Pressure	1.6MPa
工作介质/Working Medium	初级过滤的压缩空气 /Compressed air
过滤精度/Filter Precision	40um(常规/conventional)、5μm
环境及流体温度 /Ambient and Fluid Temperature	5~60℃
安装方式/Installation method	管式安装或支架安装/Pipe installation or bracket installation
安装位置/Installation position	垂直方向±5°/ Vertica|±5°
容器材料/Container Material	聚碳酸酯/ Polycarbonate
防护罩/Protective Cover	铝合金/ Aluminum alloy

型号/Model									
	手动放水型/Manual drain	HLF20-01	HLF20-02	HLF20-03	HLF30-03	HLF30-04	HLF30-06	HLF40-06	HLF40-10
	自动排水型/Auto drain	HLF20-01D	HLF20-02D	HLF20-03D	HLF30-03D	HLF30-04D	HLF30-06D	HLF40-06D	HLF40-10D
注1)接管口径/Note 1)Port Size		G1/8	G1/4	G3/8	G3/8	G1/2	G3/4	G3/4	G1
注2)标准额定流量/Note 2)Standard Rated Flow (L/min)		1000	1200	1400	2700	3000	3000	5000	5300
杯子最大容量/The cup capacity(mL)		22			43			80	
重量/Weight(kg)		0.213	0.216	0.220	0.493	0.503	0.517		
安装支架/Mounting bracket		HFOE20			HFOE30				

注1) 接管口径另有NPT螺纹可供选择。/Note 1) Rc and NPT thread are available.
注2) 输入压力1.0MPa，工作压力0.6MPa，压降为0.1MPa。 /Note 2) Inlet pressure is 1.0MPa, Working pressure is 0.6MPa, pressure drop is 0.1MPa.

外形尺寸图/ Overall Dimension Drawing(mm)

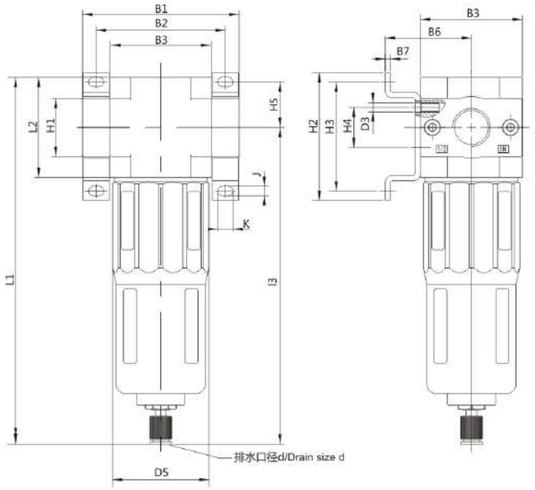

型号/Model	口径/Port Size(G)	B1	B2	B3	B6	B7	D3	ΦD5	H1	H2	H3
HLF20	G1/8~3/8	65	53	41	39	2	M4深/Depth 7	38	20	43	35
HLF30	G3/8~3/4	86	71	56	47.5	3	M5深/Depth 8	53	32	73	58
HLF40	G3/4~1	116	91	66	52	3	M5深/Depth 8	64.5	32	73	58

型号/Model	H4	H5	L1	L2	L3	Φd	J	K	L1 (带自动排水器) L1 (With Auto drain)
HLC20	11	17.5	164	40	69	6	4.3	8	155
HLC30	22	25	202	55	97.5	8	5.3	8.3	197
HLC40	22	25	226	66	103	8	5.3	8.3	216

HL系列减压阀/HL Series Air Regulator
HLR20~40系列/Series

符号/Symbol

型号命名方法 How To Order

HL R 20 - 02

- 系列号 series: HL
- 减压阀/Regulator: R
- 规格 Body Size: 20, 30, 40
- 接口螺纹 Port Size: 01(1/8), 02(1/4), 03(3/8), 04(1/2), 06(3/4), 10(1)

特性/Features

即使因输入压力和压缩空气消耗产生系统波动,也能保证其设定的工作压力非常稳定。

Even if the system fluctuates due to input pressure and compressed air consumption, this ensures that the set working pressure is very stable.

规格/Specification

最高使用压力/Highest Working Pressure	1.6MPa
工作介质 /Working Medium	初级过滤的压缩空气/Compressed air
环境及流体温度 /Ambient and Fluid Temperature	5~60℃
调压范围/Pressure Regulating Range	0.05~1.2MPa/0.05~0.7MPa
安装方式/Installation method	管式安装或支架安装/Pipe installation or bracket installation
安装位置/Installation position	任意/any

型号/Model		HLR20-01	HLR20-02	HLR20-03	HLR30-03	HLR30-04	HLR30-06	HLR40-06	HLRR40-10
注1)接管口径/Note 1)Port Size		G1/8	G1/4	G3/8	G3/8	G1/2	G3/4	G3/4	G1
注2)标准额定流量 /Note 2) Standard Flow (L/min)	工作压力/Working Pressure 0.05~1.2MPa	800	1500	1700	3200	3500	3500	3500	3500
	工作压力/Working Pressure 0.05~0.7MPa	1000	1600	1800	3300	4000	4500	4500	4500
重量/Weight(kg)		0.205	0.208	0.212	0.626	0.636	0.65	0.924	0.893
配件/ Accessories	安装支架/ Mounting bracket	HFOE20			HFOE30				
		HR20			B420				
	压力表 /Pressure Gauge	G36-10-01			G46-10-02				

注1) 接管口径另有NPT螺纹可供选择。/Note 1) Rc and NPT thread are available.
注2) 输入压力1.0MPa，工作压力0.6MPa，压降为0.1MPa。 /Note 2) Inlet pressure is 1.0MPa, Working pressure is 0.6MPa, pressure drop is 0.1MPa.

外形尺寸图/ Overall Dimension Drawing(mm)

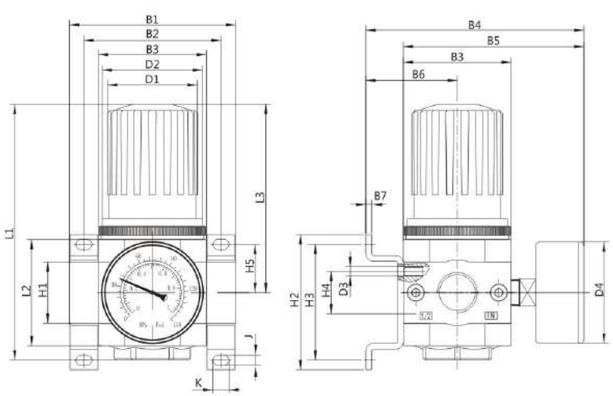

型号/ Model	口径/ Port Size(G)	B1	B2	B3	B4	B5	B6	B7	ΦD1	D2
HLR20	G1/8~3/8	65	53	41	97	78	39	2	31	M36×1.5
HLR30	G3/8~3/4	86	71	56	113	94	47.5	3	47	M52×1.5
HLR40	G3/4~1	116	91	66	128	106	52	3	47	M52×1.5

型号/ Model	D3	ΦD4	H1	H2	H3	H4	H5	L1	L2	L3	J	K
HLR20	M4深/Depth 7	42	20	43	35	11	17.5	95	40	69	4.3	8
HLR30	M5深/Depth 8	52.5	32	73	58	22	25	135	55	97.5	5.3	8.3
HLR40	M5深/Depth 8	52.5	32	73	58	22	25	146	66	103	5.3	8.3

HL系列油雾器/HL Series Air Lubricator
HLL20~40系列/Series

符号/Symbol

型号命名方法 How To Order

HL L 20 - 02

- 系列号/ series: HL
- 油雾器/Lubricator: L
- 规格/ Body Size: 20, 30, 40
- 接口螺纹/ Port Size: 01(1/8), 02(1/4), 03(3/8), 04(1/2), 06(3/4), 10(1)

特性/Features

自动可变节流式油雾器，可均匀地向压缩空气喷油雾,在工作中可实现不停气加油，可通过调节螺钉调节滴油量，常规每1000L空气中含有1-12滴油就足够。
Automatic Variable throttling oil mist dispenser for uniform compressed Air Spray.The oil can be filled with pressure non-stop.The flow rate of oil can be adjusted by adjusting the screw.1-12 drops of oil per 1000L of air is enough.

规格/Specification

最高使用压力/Highest Working Pressure	1.6MPa			
工作介质/Working Medium	经过滤的压缩空气 /Compressed air			
结构特点/Structural features	油雾型自动可变节流式/Oil mist type can be automatically throttles			
环境及流体温度 Ambient and Fluid Temperature	5~60℃			
安装方式/Installation method	管式安装或支架安装/Pipe installation or bracket installation			
安装位置/Installation position	垂直方向±5°/ Vertical±5°			
建议用油/Recommended Oil Use	油液牌号/Oil grade	Aral Vitam GF 32 Mobil DTE24	BP Energol HLP32 Shell Hydrol DO32	Esso Nuto H32
	粘度/Viscosity	32mm²/s(=cst)温度为/at 40℃ ISOVG32 ISO3448标准/Standard		
容器材料/Container Material	聚碳酸酯/Polycarbonate			
防护罩/ Protective Cover	铝合金/Aluminum alloy			

型号/Model	HLL20-01	HLL20-02	HLL20-03	HLL30-03	HLL30-04	HLL30-06	HLL40-06	HLL40-10
注1)接管口径/Note 1)Port Size	G1/8	G1/4	G3/8	G3/8	G1/2	G3/4	G3/4	G1
注2)标准额定流量/Note 2)Standard Rated Flow (L/min)	1300	2300	2700	5500	6100	6300	6100	6300
最小起雾流量/Minimum flow of fog(L/min)	3			6			10	
最大贮油量/Largest oil storage(mL)	45			120			190	
重量/Weight(kg)	0.212	0.215	0.219	0.485	0.495	0.509	0.738	0.707
安装支架/Mounting bracket	HFOE20			HFOE30				

注1) 接管口径另有NPT螺纹可供选择。/Note 1) Rc and NPT thread are available.
注2) 输入压力1.0MPa，工作压力0.6MPa，压降为0.1MPa。 /Note 2) Inlet pressure is 1.0MPa, Working pressure is 0.6MPa, pressure drop is 0.1MPa.

外形尺寸图/Overall Dimension Drawing(mm)

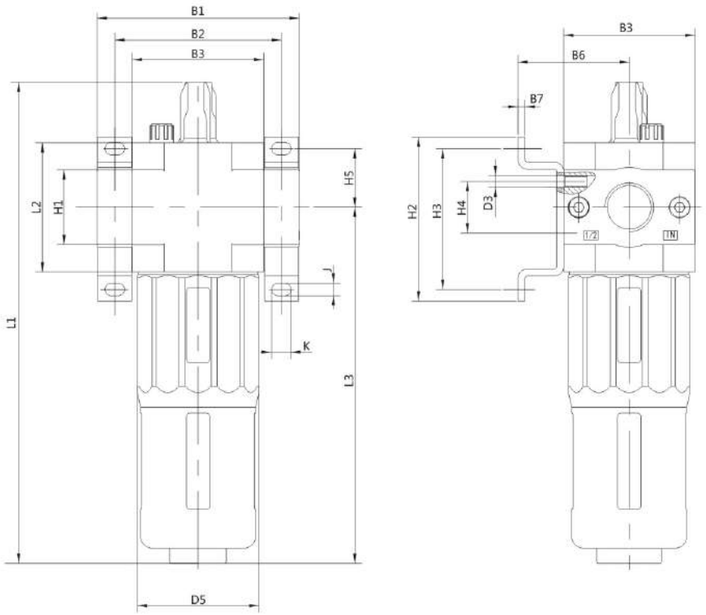

型号/Model	口径/Port Size(G)	B1	B2	B3	B6	B7	D3	ΦD5	H1	H2	H3	H4	H5	L1	L2	L3	J	K
HLL20	G1/8~3/8	65	53	41	39	2	M4深/Depth 7	38	20	43	35	11	17.5	169	40	123	4.3	8
HLL30	G3/8~3/4	86	71	56	47.5	3	M5深/Depth 8	53	32	73	58	22	25	206	55	152	5.3	8.3
HLL40	G3/4~1	116	91	66	52	3	M5深/Depth 8	64.5	32	73	58	22	25	227	66	168	5.3	8.3

HL系列过滤减压阀/HL Series Filter Regulator
HLW20~40系列/Series

符号/Symbol

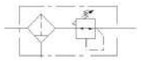

型号命名方法 How To Order

HL W 20 - 02 D

- HL W: 系列号 series; 过滤减压阀/Filter Regulator
- 20: 规格 Body Size — 20, 30, 40
- 02: 接口螺纹 Poret Size — 01(1/8), 02(1/4), 03(3/8), 04(1/2), 06(3/4), 10(1)
- D: 无: 标准 No: Standard; D: 自动排水 Auto drain

特性/Features

空气过滤器能滤除上游空气中的污物、管垢、铁锈及冷凝水。在特别要求的场合,5μm滤芯可以很容易替换40μm标准滤芯。即使因输入压力和压缩空气消耗产生系统波动，也能保证其设定的工作压力非常稳定。

This series products can filter the upper air of dirt, scale, rust and condensate; In special occasions, 40μm standard filter element can be easily replaced by 5μm filter element. Even If the system fluctuates due to input pressure and compressed air consumption, this ensures that the set working pressure is very stable.

规格/ Specification

最高使用压力/Highest Working Pressure	1.6MPa
工作介质/Working Medium	初级过滤的压缩空气 /Compressed air
过滤精度/Filter Precision	40μm(常规/conventional)、5μm
环境及流体温度/Ambient and Fluid Temperature	5~60℃
工作压力/Pressure of work	0.05~1.2MPa/0.05~0.7MPa
安装方式/Installation method	管式安装或支架安装/Pipe installation or bracket installation
安装位置/Installation position	垂直方向±5°/Vertical±5°
容器材料/Container Material	聚碳酸酯/Polycarbonate
防护罩/Protective Cover	铝合金/Aluminum alloy

型号/Model	手动放水型/Manual drain	HLW20-01	HLW20-02	HLW20-03	HLW30-03	HLW30-04	HLW30-06	HLW40-06	HLW40-10
	自动排水型/Auto drain	HLW20-01D	HLW20-02D	HLW20-03D	HLW30-03D	HLW30-04D	HLW30-06D	HLW40-06D	HLW40-10D
注1)接管口径/Note 1)Port Size		G1/8	G1/4	G3/8	G3/8	G1/2	G3/4	G3/4	G1
注2)标准额定流量/Note 2) Standard Rated Flow (L/min)	工作压力/Working Pressure 0.05~1.2MPa	750	1400	1600	3100	3400	3400	9000	10000
	工作压力/Working Pressure 0.05~0.7MPa	900	1500	1700	3400	3900	4000	9500	16000
杯子最大容量/The cup capacity(ML)		22			43			80	
重量/Weight(kg)		0.290	0.293	0.297	0.720	0.730	0.744	1.04	1.01
配件/Accessories	安装支架/Mounting bracket	HFOE20			HFOE30				
		HR20			B420				
	压力表/Pressure Gauge	G36-10-01			G46-10-02				

注1) 接管口径另有NPT螺纹可供选择。/Note 1) Rc and NPT thread are available.
注2) 输入压力1.0MPa，工作压力0.6MPa，压降为0.1MPa。 /Note 2) Inlet pressure is 1.0MPa, Working pressure is 0.6MPa, pressure drop is 0.1MPa.

外形尺寸图/Overall Dimension Drawing(mm)

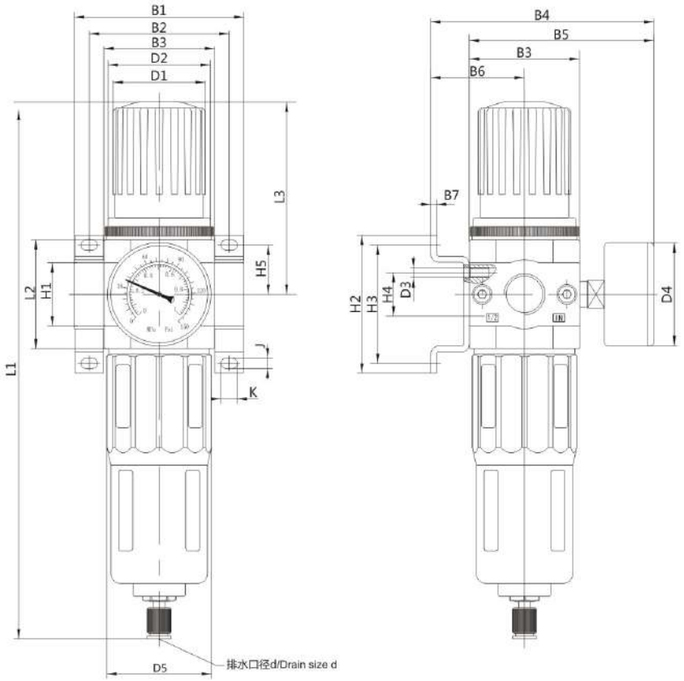

型号/Model	口径/Port Size(G)	B1	B2	B3	B4	B5	B6	B7	ΦD1	D2	D3	ΦD4
HLW20	G1/8~3/8	65	53	41	97	78	39	2	31	M36×1.5	M4深/Depth 7	42
HLW30	G3/8~3/4	86	71	56	113	94	47.5	3	47	M52×1.5	M5深/Depth 8	52.5
HLW40	G3/4~1	116	91	66	125	106	52	3	47	M52×1.5	M5深/Depth 8	52.5

型号/Model	ΦD5	H1	H2	H3	H4	H5	L1	L2	L3	Φd	J	K	L1 (带自动排水器) L1 (With Auto drain)
HLW20	38	20	43	35	11	17.5	213	40	69	6	4.3	8	204
HLW30	53	32	73	58	22	25	273	55	97.5	8	5.3	8.3	268
HLW40	64.5	32	73	58	22	25	296	66	103	8	5.3	8.3	289

过滤减压阀/Filter Regulator HLW2042

特性/Features

- 5-M4螺纹为纺织机械专用连接方式，产品结构紧凑，适用范围广。
  5-M4 thread is for textile machinery dedicated connection, the product structure is compact, and a wide range of applications.
- 阀体采用型材加工，气密性好。
  The valve body is machined with aluminum profile and has good air tightness.

符号/Symbol

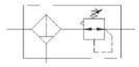

型号/Model	接口/Port Size	备注/Note
HLW2042	Φ9	纺织专用进气2-M4 出气3-M4 连接接口连接尺寸如下图 Special for textile machinery Inlet 2-M4 Outlet 3-M4 The connectiong dimensions are shown as below
HLW2042-01	G1/8	
HLW2042-02	G1/4	

规格/Specification

最高使用压力/Highest Working Pressure	1.6MPa
工作介质/Working Medium	初级过滤的压缩空气/Compressed air
过滤精度/Filter Precision	25μm
环境及流体温度/Ambient and Fluid Temperature	5~60℃
工作压力/Working Pressure	0.05~0.7MPa
标准额定流量/Rated Flow (L/min)	1500
杯子最大容量/Bowl Capacity (ml)	13
安装位置/Installation position	垂直方向±5°/ Vertical±5°
容器材料/Container Material	聚碳酸酯/Polycarbonate+铝合金/Aluminum alloy
压力表/Pressure Gauge	G36-10-01
重量/Weight(kg)	0.35
放水器功能/Drain Function	停气排水及手动排水 Air Shutoff Drain/Manual Drain

*输入压力1.0MPa，工作压力0.6MPa，压降为0.1MPa。 Inlet pressure is 1.0Mpa, working Pressupre is 0.6MPa, Pressure drop is 0.1Mpa.

外形尺寸图/Overall Dimension Drawing(mm)

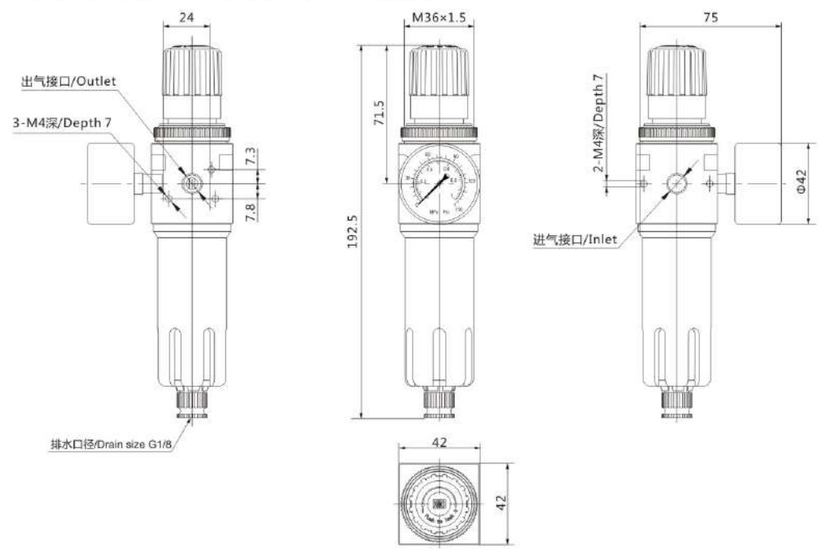

NAR管接式减压阀/NAR Compact Regulator

符号/Symbol

规格/Specification

工作介质/Working Mediun	经过滤的压缩空气 /Compressed Air
保证耐压力/Ensured Pressure Resistance	1. 5MPa(15kgf/cm²)
最高使用压力/Maximum Working Pressure	1.0MPa(10kgf/cm²)
调压范围/Pressure Regulating Range	0.05~0.85MPa(0.5~8.5kgf/cm²)
环境及流体温度/Ambient and Fluid Temperature	5~60℃
阀型/Valve Type	带溢流型/Wlith Overflow

型号 /Model	规格/Specifications				配件 /Accessories	
	注1)额定流量 /Note 1)Rated Flow (L/min)	注2)接管口径 /Note 2)Port Size (G)	压力表口径 /Pressure Gauge Port	重量 /Weight (kg)	托架 /Bracket	压力表 /Pressure Gauge
NAR200-01	300	1/8	1/8	0.16	NB220	G27-10-R1
NAR200-02		1/4				

注1)供应压力为07MPa(7.1 kgf/cm)二次设定压力为0.5MPa(5.1 kgf/cm²)的情况下.
注2)接管口径另有Rc和NPT螺纹可供选择。
Note 1)Supply pressure is 0.7MPa (7.1 kgf/cm²) and secondary setting pressure is 0.5MPa (5.1 kgf/cm²).
Note 2)Rc and NPT thread are available.

外形尺寸/Overall Dimension

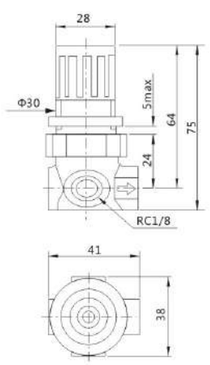

NAR200

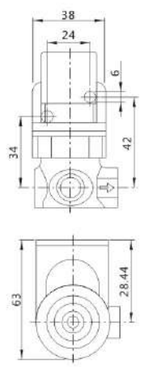

安装支架
Mounting Bracket

流量特性曲线/Characteristic Curve of Flow Rate

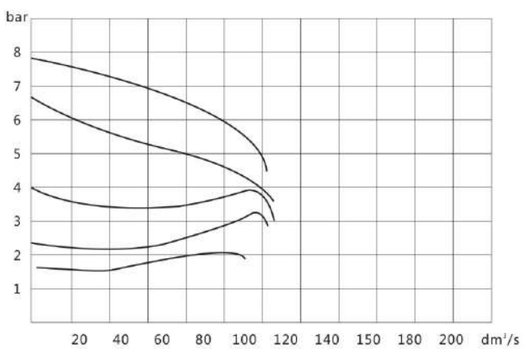

NAP管接式溢流阀/NAP Overflow Valve NAP200

型号命名方法/How To Order

NAP200 - R 01

无/No: G	接口螺纹 Port Size
R: Rc	01: 1/8
N: NPT	02: 1/4

符号/Symbol

作用/Function

保护压缩空气系统免受过压伤害。
Protect the compressed air system from overpressure damage

规格/Specification

型号/Model	NAP200-01/02
连接口径/Port Size	1/8、1/4
压力表接口/Pressure Gauge Port	1/8
溢流调节范围/Pressure Range	0.3~0.7MPa
工作介质/Working Medium	初级过滤的压缩空气 /Compressed air
使用环境温度/Ambient and Fluid Temperature	-5~80℃

外形尺寸/Overall Dimension

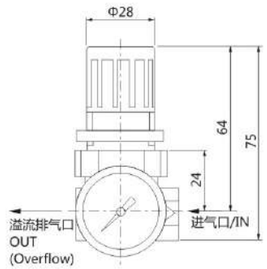

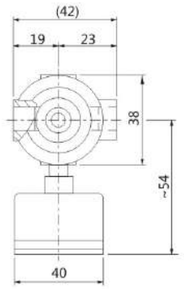

直动式精密减压阀/Direct-acting precision Micro Regulator HMRP 2000系列/Series

符号/Symbol

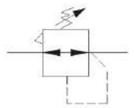

特性/Features

有常泄式溢流孔，稳压精度高，流量特性好，能快速排出下游的多余压力。
Provided with a controlled air escape which is able to achieve highly accurate pressure adjustment, High stability with low load losses and big flow rate, Downstream overpressures quickly eliminated.

型号命名方法/How To Order

HM R P 2000 - 01

- HM：系列号/Series
- R：减压阀/Regulator
- P：恒溢流/Always bleeding；无：溢流 NO: Bleeding
- 2000：规格/Size
- 01：接口螺纹/Port Size；01(1/8)；02(1/4)

规格/Specification

最高使用压力/Highest Working Pressure	1.6MPa
工作介质 /Working Mediun	经过滤的压缩空气 /Compressed air
环境及流体温度/Ambient and Fluid Temperature	5~60℃
调压范围/Pressure Range	0.05-0.85MPa
安装方式/Installation method	支架安装/With bracket
安装位置/Installation position	任意/Any where

型号/Model	规格/Specifications					
	额定流量/ Rated Flow	接管口径/ Port Size	压力表口径 /Pressure Gauge Port	重量 /Weight	托架 /Bracket	压力表 /Gauge
HMRP2000-01	450L/min	G1/8	G1/8	0.16kg	X-系列托架 /The same as X series	G36-10-01
HMRP2000-02		G1/4				
HMR2000-01		G1/8				
HMR2000-02		G1/4				

外形尺寸图/Overall Dimension Drawing(mm)

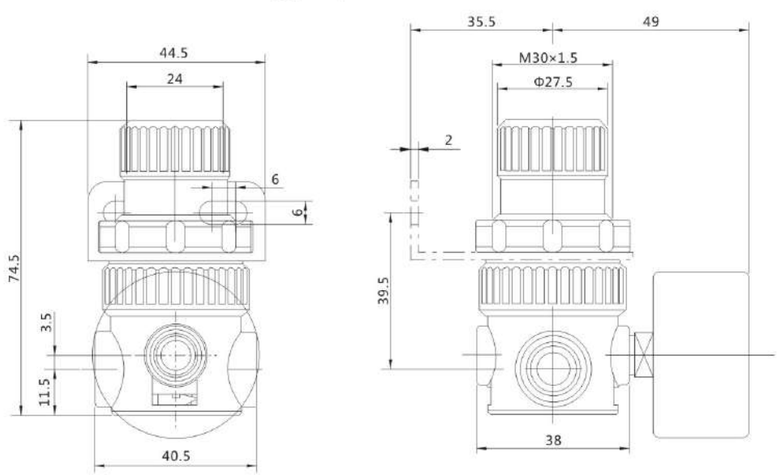

微型精密减压阀/Micro Precision Regulator HMR35

特性/Features

1. 阀体的材质为工程塑料，所以整个产品重量轻，体积小，非常适合便携式系统如呼吸机、牙科设备上使用。
2. 由弹簧、密封件、阀芯组成的特殊的溢流结构，动作灵敏，稳压精度高，流量特性好。法兰式安装方式，简单方便。

1. The valve body is made of engineering plastic, the product is light weight and compact, making it ideal for use on portable systems, such as ventilators, dental equipment, etc.
2. Special overflow structure consisting of spring, seal and valve core, sensitive movement, high regulating accuracy and good flow characteristics. Flange installation, simple and convenient.

符号/Symbol

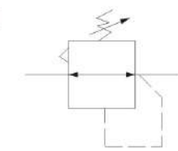

规格/Specification

型号/Model	HMR35
额定流量/Rated Flow	260L/min
最高使用压力/Highest Working Pressure	1.0MPa
工作介质/Working Medium	经初步过滤的压缩空气或氧气/Compressed air
环境及流体温度/Ambient and Fluid Temperature	0° C ~ 60 °C
调压范围/Pressure Regulating Range	0.05 ~ 0.35MPa
安装方式/Installation	底部法兰板式安装/Bottom flange installation
安装位置/Installation position	任意位置/Any where
重量/Weight (g)	71

外形尺寸图/Overall Dimension Drawing(mm)

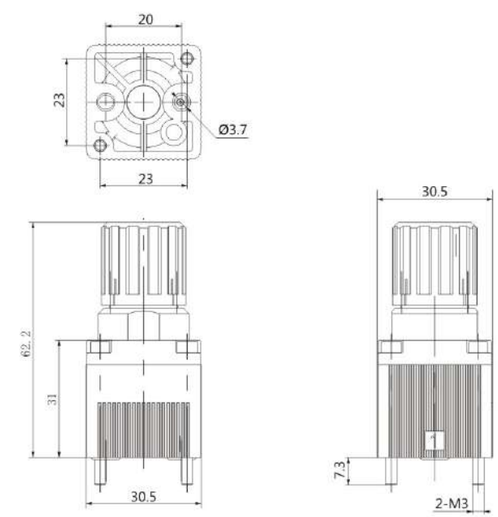

精密减压阀/Precision Regulator
HIR 2000.3000.4000系列/Series

特性/Features:

- 体积小,重量轻/Compact and light weight.
- 压力设定精确/Accurate pressure setting.
- 调节螺钉的齿间距为0.5mm/The thread distance of adjusting screw is 0.5mm.
- 安装方便,可用托架独立安装或与现在的模块式过滤组合元件AF及AFM直接安装
  Easy installation, can be stalled with bracket independently or with modular filter AF and AFM directly.
- 标准型也带面板安装 /Manifolding is available.
- 先导排气口与主排气口分开 /Pilot vent is separated from the main vent.
- 可在洁净房使用(特注产品) /Can be used in the clean room.

型号命名方法

HIR 3 0 0 0 N 02 G R

阀体大小/Body size
2:HIR2000型/type
3:HIR3000型/type
4:HIR4000型/ype

设定形式/Type of setting
0: 基本型(手轮)/Basic(Handle)
1: 气控型/Air operated
(仅/ only HIR2、3000)

设定压力范围/Set pressure range
0: 0.01~0.2MPa
1: 0.01~0.4MPa
2: 0.01~0.8MPa

螺纹种类/
Thread style
无标记: G
No mark: G
N: NPT
R: Rc

接管口径/
Port size
01: 1/8(仅HIR2000)
02: 1/4(仅HIR3000)
03: 3/8(仅HIR4000)
04: 1/2(仅HIR4000)

附件可选项/
无: 不带
B: 带托架
G: 带压力表
Accessories
NO: NO
B: With bracket
G: With gauge

追记号
无：标准安装
R: 压力表、托架、
标贴安装在背侧
No: Standard Installation
R: Pressure gauge, bracke。
label installed on reverse side.

注：标准安装位置是IN侧在左，OUT侧在右，
压力表和标贴在前，后部带托架。

Note: The standard mounting position should be ON side on left, OUT side on right,pressure gauge and label in front and bracket on the back.

符号/Symbol

标准型/Basic

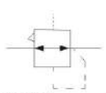

气控型/Air operated

规格/Specification

灵敏度/Sensitivity		在0.2%满度以内/Within 0.2% of full span
重复精度/Repeatability		在±0.5%满度以内 /Within±0.5% of full span
耗气量/Air consumption	HIR2000	最大3.5L/min(ANR)在1.0MPa压力下 Max 3.5L/min(ANR) at supply pressure1.0MPA 排气口最大3L/min(ANR)在最高设定压力下 Exhaust port: Max 3L/min(ANR) at maximum set pressure
	HIR3000	
	HIR4000	
环境及流体温度/Ambient and Fluid Temperature		-5~+60℃(未冻结时/No freezing)
最高使用压力/Highest Working Pressure		1.0MPa
压力表连接口径/Pressure Gauge Port		G1/8

型号/规格/ Type /Specification

型号/Type		规格/Specifications			配件/Accessories	
		最低使用压力(MPa) Lowest working pressure	设定压力范围(MPa) Set pressure range	接管口径 Port Size	压力表型号 Pressure Gauge Type	托架型号 Bracket Type
标准型 standard type	HIR2000-01	设定压力/ Set pressure + 0.05	0.01~0.2	1/8	G36-2-01	B2-IR
	HIR2010-01		0.01~0.4		G36-4-01	
	HIR2020-01		0.01~0.8		G36-10-01	
	HIR3000-02		0.01~0.2	1/4	G36-2-01	B3-IR
	HIR3010-02		0.01~0.4		G36-4-01	
	HIR3020-02		0.01~0.8		G36-10-01	
	HIR4000-□	设定压力/Set pressure + 0.1	0.01~0.2	3/8 ~ 1/2	G36-2-01	B4-IR
	HIR4010-□		0.01~0.4		G36-4-01	
	HIR4020-□		0.01~0.8		G36-10-01	
气控型 Air operated type	HIR3120-02	设定压力/Set pressure+0.05	0.01~0.8	1/4	G36-10-01	B3-IR
	HIR4120-□	设定压力/Set pressure+0.1	0.01~0.8	3/8~1/2	G36-10-01	B4-IR

安装在模块式过滤组合元件上/ Modular products and accessory combinations

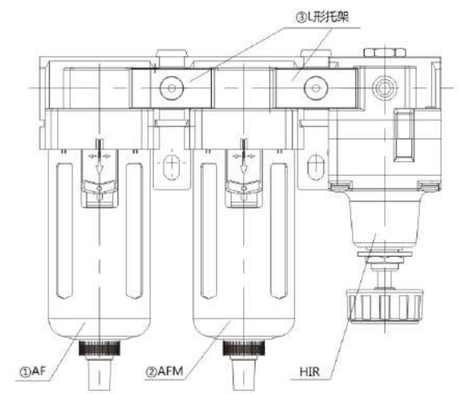

适合附属品名称 Suitable accessory denomination	适合型号/Suitable for model		
	HIR20□0	HIR30□0 HIR3120	HIR40□0 HIR4120
①空气过滤器/Air filter	AF2000	AF3000	AF4000
②油雾分离器/Oil mist separator	AFM2000	AFM3000	AFM4000
③L形托架/L bracket	B210L	B310L	B410L
④T形托架/T bracket	B210T	B310T	B410T
⑤隔板/partition	Y20	Y30	Y40
⑥带L形托架隔板/With the L bracket clapboard	Y20L	Y30L	Y40L
⑦带T形托架隔板/With the T bracket clapboard	Y20T	Y30T	Y40T

应用示例/Application

张力控制
Tension controller

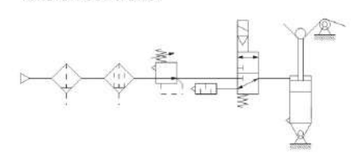

接触压力控制
Contact pressure control

低摩擦气缸
Low friction cylinder

外形尺寸图/Overall Dimension Drawing(mm)

HIR20□0-01

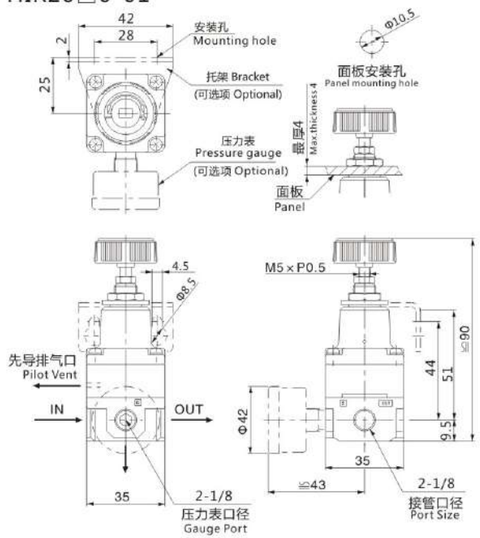

HIR30□0-02

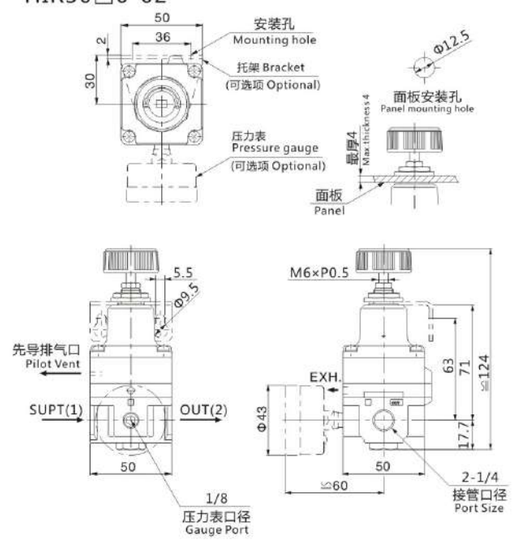

HIR40□0-0□

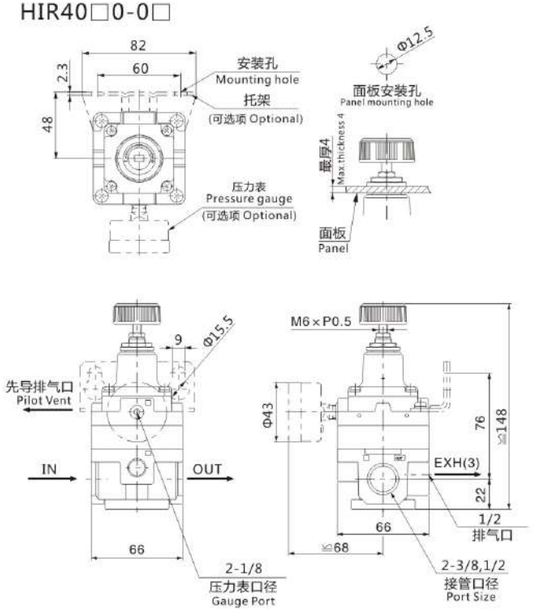

HIR3120-02□
(气控型)

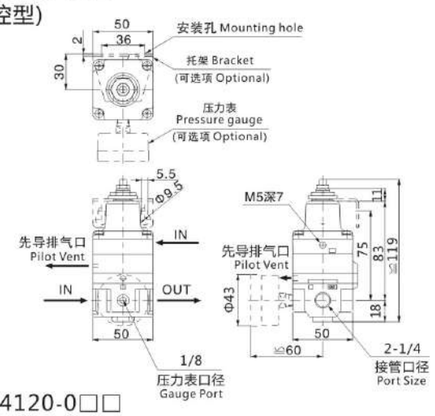

HIR4120-0□□
(气控型)

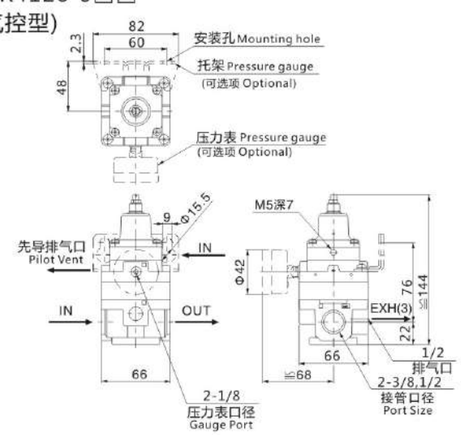

手柄内置压力表的减压阀/Regulator With Integrated Gauge In The Adjusting Knob HARGZ20

符号/Symbol

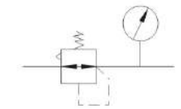

特性/Features

- 一款压力表装嵌在调节手柄上的减压阀。产品在结构上更加紧凑，在设备上的安装变得简单方便，降低了对装配空间的要求。
  A regulator with integrated gauge in the adjusting knob. The product is more compact in structure, easy to install on the equipment, reducing therequirements of assembly space.
- 即使因输入压力和压缩空气消耗产生系统波动，也能保证其设定的工作压力非常稳定。
  Even system fluctuations due to input pressure and compressed air consumption, it can ensure that the set operating pressure is very stable

规格/Specification

型号/Model	HARGZ20-01	HARGZ20-02
注1)接管口径/Note 1)Port Size	G1/8	G1/4
最高使用压力/Maximum Working Pressure	1.0MPa	
工作介质/Working Medium	初级过滤的压空气/Compressed air	
环境温度或流体温度/Ambient and Fluid Temperature	5~60℃	
工作压力/Working Pressure	0.05~0.85MPa	

外形尺寸图/Overall Dimension Drawing(mm)

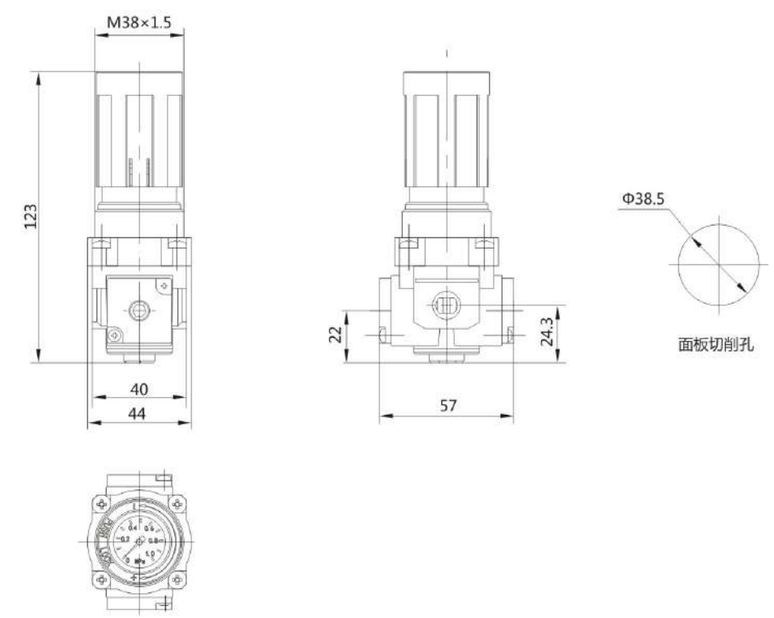

带锁型二位三通释放式截流阀/Venting Safety Lock-out Valve HVHS2000~5000系列/Series

符号/Symbol

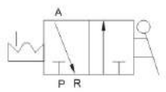

特性/Features

该截流阀工作时能释放出次压侧压力，方便维修；具有锁定功能，确保维修人员安全。
It is easy to be maintained because it can realse the hypo-side pressure when it is working.
It can ensure the safty of the maintenance peoplen bcease of the lockup functinon

外形尺寸图/Overall Dimension Drawing(mm)

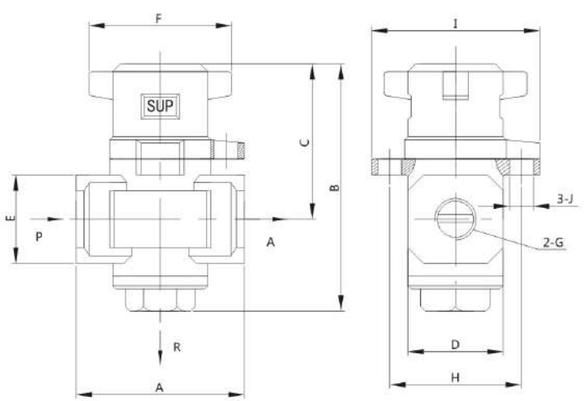

型号/Model	G	排气口径/Vent size	A	B	C	D	E	F	H	I	J
HVHS2000-01-X1	G1/8	G1/8	40	59	39	28	22	40	32	41	Φ6
HVHS2000-02-X1	G1/4	G1/8	40	59	39	28	22	40	32	41	Φ6
HVHS3000-02-X1	G1/4	G1/4	53	78	49	30	28	45	41.5	53	Φ7.5
HVHS3000-03-X1	G3/8	G1/4	53	78	49	30	28	45	41.5	53	Φ7.5
HVHS4000-03-X1	G3/8	G3/8	70	84	52	36	36	45	41.5	53	Φ7.5
HVHS4000-04-X1	G1/2	G3/8	70	84	52	36	36	45	41.5	53	Φ7.5
HVHS5000-06-X1	G3/4	G1/2	90	136	72	54	48	68	77	90	Φ8.5
HVHS5000-10-X1	G1	G1/2	90	136	72	54	48	68	77	90	Φ8.5

稳定启动电磁阀/Soft-start Valve HAV2000~5000系列/Series

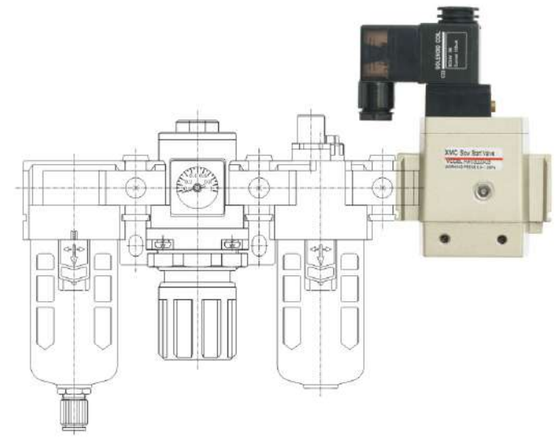

符号/Symbol

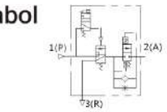

特性/Features

稳定启动电磁阀用于系统的安全保护作用。启动初期它只允许少量空气流过（流量可以调节），当出口压力达到进口压力的一半时，该阀便完全开启，达到其最大流量。该阀关闭时，残压会通过该阀快速排空。本阀可与空气组合元件模块式连接。

Soft-start valve is used for the safety of the system. At the beginning of start-up, it allows only a small amount of air to flow through (flow can be adjusted) and when the outlet pressure reaches haif of the inlet pressure, the valve is fully open to reach its maximum flow rate. When the valve is closed, the residual pressure will be quickly exhaust through the valve. The valve can be modularly connected to the air combination units.

型号命名方法

HAV A 20 00 - R 02 G - 1 G

控制方式 Type of control	阀体大小/ Body Size	螺纹种类/ Thread Type	接管口径/ Port Size	可选项/ optional	额定电压/ Voltage	导线引出方式/ Plug Mode
无: 电控式 No: Solenoid	20: 1/4	无标记: G No tags: G	02: 1/4(仅HAV2000)	无标记：无 No tags: No	1: AC110V	G: 直线引出方式 G: Grommet type
有: 气控式 With: Pneumatic	30: 3/8	R: RC	03: 3/8(仅HAV3000)	G: 带压力表 G: With Gauge	2: AC220V	D: 插座式 D: DIN Type
	40: 1/2	N: NPT	04: 1/2(仅HAV4000)		3: DC12V	
	50: 3/4、1		06: 3/4(仅HAV5000)		4: DC24V	
			10: 1(仅HAV5000)		5: 其他 5: other	

规格/Specification

型号/Mode		HAV2000	HAV3000	HAV4000	HAV5000	
接管口径/Port Size		1/4	3/8	1/2	3/4	1
有效截面积(mm²)/ effective sectional area	1(P)-2(A)	20	37	61	113	122
	2(A)-3(R)	24	49	76	132	141
使用压力范围/Applicable Pressure Range		0.3~1.0MPa				
环境及流体温度/Ambient and Fluid Temperature		0~60℃				
线圈额定电压/Coil voltage rating		DC24、12V、AC220、110V				
允许电压波动/Allow voltage fluctuation		额定电压/Rated volatge -15%~+10%				
线圈绝缘等级/Coil insulation class		B级或相同等级/B level or the same level				
消耗功率Dc/Consumed power DC		3W				
视在功率AC/Apparent power AC		启动/Start: 5.6VA 保持/Keep: 3.4VA				
气控端盖接口/Port size of cap for pnuematic version		G1/8				
气控端最低启动压力/Lowest start pressure for pneumatic version		0.2MPa				

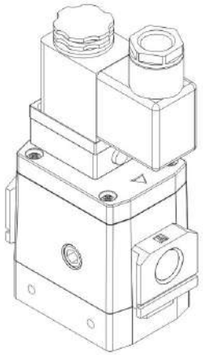

外形尺寸图/Overall Dimension Drawing(mm)

插座式/DIN Type:
HAV□00-□-□D

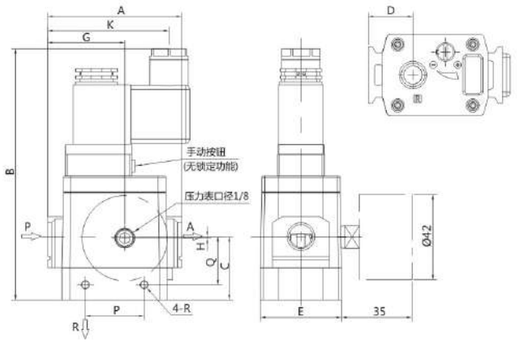

直接出线式/Grommet type：
HAV□00-□-□G

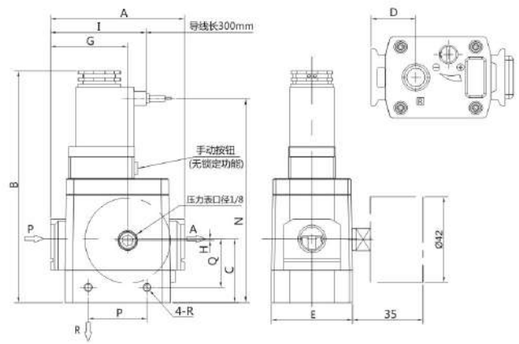

气控式稳定启阀/Pneumatic Control type：
HAVA□00-□

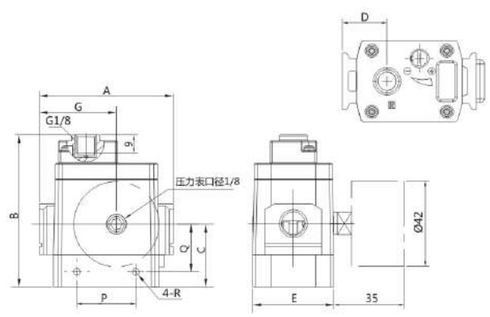

型号/Mode	出线方式/Entry cable	口径/Port Size G	A	B	C	D	E	G	H	I	K	N	P	Q	R
HAV2000	G	1/4	66	114	31	22	40	38	0	47	-	100	29	23.5	M4 深/Depth 5
	D			124						-	60	-			
HAVA2000	-			75						-	-	-			
HAV3000	G	3/8	76	121	36	24	48	43	2	50	-	107	28	27.5	M5 深/Depth 5
	D			131						-	63	-			
HAVA3000				82						-	-	-			
HAV4000	G	1/2	98	136	47	32	52	57	3	62	-	122	42	37	M6 深/Depth 6
	D			146						-	75	-			
HAVA4000	-			97						-	-	-			
HAV5000	G	3/4 1	128	164	59	39	74	77	0	74	-	150	50	46	M6 深/Depth 7.5
	D			174						-	85	-			
HAVA5000	-			139						-	-	-			

HAL-2二次油雾器/Secondary Lubricator

符号/Symbol

技术参数/Technical Parameters:

工作介质/Working Medium	经过滤洁净的压缩空气/Filtered Compressed Air
公称压力/Nominal Pressure	1. 00MPa
介质温度与环境温度/Medium and Ambient Temperature	5-60℃
建议用油/Recommended Oil	透平1号油ISOVG32/Turbinen No.1 Oil ISOVG32
润滑油滴油量调节/Oildrop flow	0-120滴均匀可调/0-120 drops
容器材料/Container material	聚碳酸酯/Polycarbonate
最大储油量	350ml

用途/Application

HAL-2二次油雾器与AF4000-04空气过滤器、AW4000-04空气过滤减压阀组合为HAFWL-2大流量精密过滤油雾润滑装置，应用于轴承生产流水线上，在轴承磨削工序中对轴承和磨头起油雾润滑作用。

HAL-2 Secondary Lubricator and AF4000-04 Air filter and AW4000-04 Filter with Regulator combination is called HAFWL-2 big flux precision filtration lubricator set. It can be applied to the product line of bearing producting. It can lubricate the bearing and the grinding wheel during the grinding operation

外形尺寸图/Overall Dimension Drawing(mm)

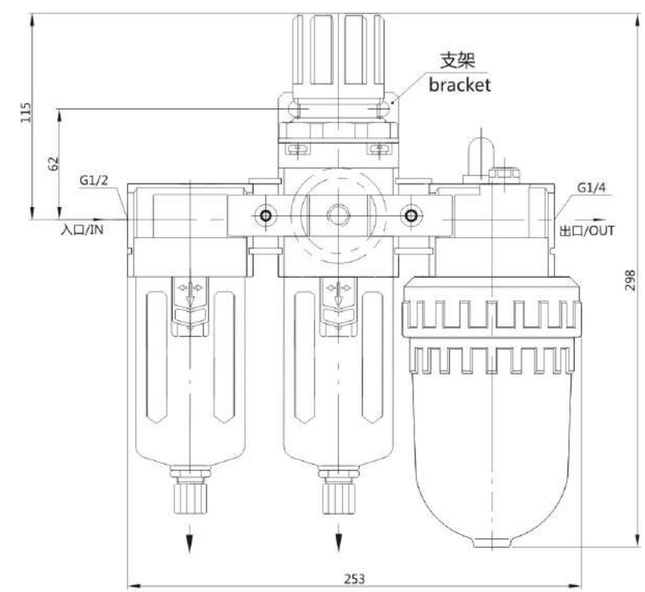

HAFWL-2

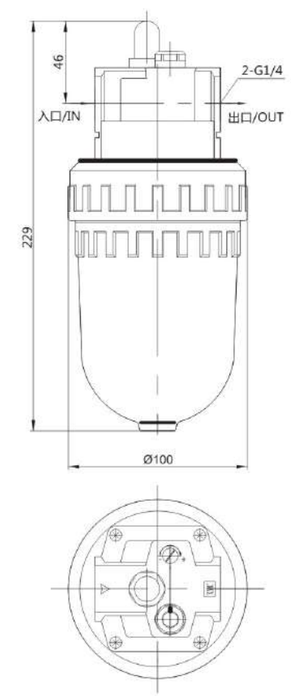

HAL-2

HAMC系列排气洁净器/HAMC Serise Exhaust Cleaner
HAMC220~520系列/Series

规格/Specification

环境及流体温度/Ambient and Fluid Temperature	5-60℃
消声效果/Muffling Effect	35分贝以上/More than 35 decibel
油雾回收效果/Oil mist recovery effect	99.9%以上/More Than 99.9%
回收的油雾排走方法/Recycling of oil mist walk way	内螺纹排放孔/Female thread hole
滤芯一次测压力/Primary pressure measurement of filter element	0.1MPa以下

型号/Model	HAMC220-02	HAMC320-02	HAMC320-03	HAMC520-04	HAMC520-06
接管口径/ Port size	G1/4	G1/4	G3/8	G1/2	G3/4
有效截面积/effective sectional area(mm²)	12	16	16	55	55
最大处理流量/ Maximum flow processing(L/min)	200	300	300	1000	1000
重量/Weight	0.12kg	0.25kg	0.25kg	0.55kg	0.55kg

使用说明/Instructions

1. 必须垂直安装。
2. 当排气洁净器排气时，进口压力达到0.1MPa或已使用1年时，应更换滤芯。
3. 不得接触有机溶剂。
1. Must be installed in a vertical position.
2. The filter element should be changed,When the Inlet pressure is 0. 1 Mpa or used more than 1 year..
3. No exposure to organicsolvents.

特性/Features

1. HAMC排气洁净器是新一代的节能环保产品。
2. 用来吸收排气噪声，并分离和排放出压缩空气中的油雾和冷凝水，降低噪声及油雾的污染，保持工作环境的清洁和宁静。
3. 主要用于把多个气阀的排气口连接起来,作集中的噪声及油雾处理。
1. HAMC exhaust cleaning machine is the new generation of energy conservation and environmental protection products.
2. Used to absorb exhaust noise, recover the waste oil and water, to keep clean.
3. Mainly used to collect the noise and oil mist from the whole system.

外形尺寸图/ Overall Dimension Drawing(mm)

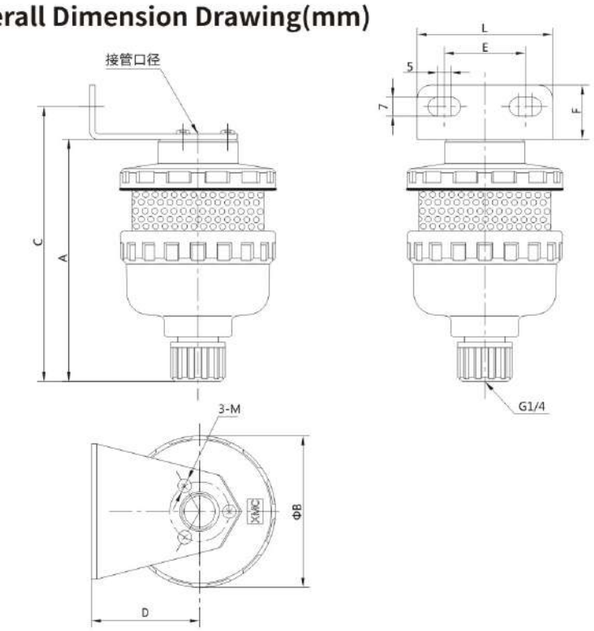

尺寸表/Dimension Sheet(mm)

型号/Model	接管口径/Port Size(G)	A	B	C	D	E	F	L	3-M螺钉/Screw
HAMC220	1/4	88	57.5	100	40	30	20	50	M3×8
HAMC320	1/4 , 3/8	120.5	76.5	140.5	55	30	30	50	M3×8
HAMC520	1/2 , 3/4	173.5	102.5	193.5	70	40	30	70	M4×8

HID离心式精密干燥器/Centrifugal Precision Dryer

型号命名方法/How To Order

HID40 □ - 03D - □

- H：AF4000 阀体/Body
- HD：HDAF40 阀体/Body
- 无：不带滤芯 NO：Without filter element
- F：带滤芯 F：With filter element
- 03(3/8)
- 04(1/2)
- 无：标准(对应HA、HDA系列杯罩) NO: Standard (Reference to HA、HDA series cup and cover)
- 1：A系列杯体防护罩 A series cup and protective cover
- 2：HA系列杯体防护罩 HA series cup and protective cover
- 3：金属杯体，金属杯B款为3B Metal cup, TYPE B metal cup is 3B.
- 4：聚碳酸酯杯体及防护罩 Polycarbonate cup and protective cover

规格/Specification

连接口径/Port Size	G3/8, G1/2
最高使用压力/Highest Working Pressure	1.0MPa
工作介质/Working Medium	初级过滤的压缩空气 /Compressed air
选用配件/Optional accessories	支架/Bracket
安装位置/Installation position	垂直安装/Vertical installation

特性/Features

- 除水率可达99.9%，彻底解决末端气源的含水问题。
- 产品外观轻巧，安装简单，符合经济效益。
- 模块式拼装。可以用附件与过滤器、油雾分离器及减压阀进行快速拼装，满足客户的各种需求。
- The water removal rate can reach 99.9%, completely solving the liquid water problem of the end air source.
- The product has a lightweight appearance, simple installation, and is cost-effective.
- Modular assembly. Filters, mist separators, and air regulators etc. can be quickly assembled by using accessories to meet various customer needs.

用途/Application

- 解决压缩空气中的水分问题，广泛应用于加工机械、医疗器械、激光设备、食品机械等行业。
- Solving the problem of water in compressed air, it is widely used in industries such as processing machinery, medical equipment, laser devices, and food machinery.

外形尺寸图/Overall Dimension Drawing(mm)

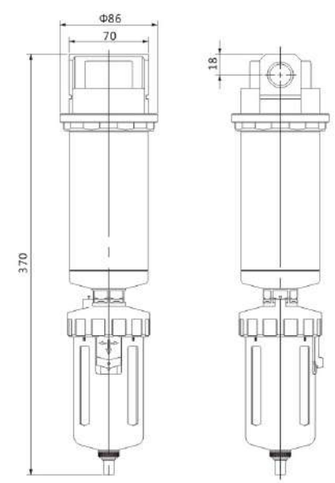

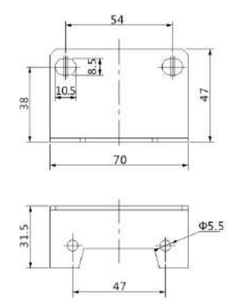

B440支架：可应用于HID40。
B440 Bracket ：Can be applied to HID40.

HAD系列自动排水器/HAD Serise Auto Drain
HAD402系列/Series

规格/Specification

型号/Model	HAD402-02	HAD402-03	HAD402-04
保证耐压力/Ensured Pressure Resistance	1. 5MPa		
动作压力/Operating Pressure	0.15-1.00MPa		
环境及流体温度/ Ambient and Fluid Temperature	5-60℃		
接管口径/Port Size	G1/4	G3/8	G1/2
排水口径/Drain port size	R1/8		
排水状态/Drain Status	常开型/NormalOpenType		
工作介质/Working Medium	压缩空气 /Compressed A ir		

外形尺寸图/Overall Dimension Drawing(mm)

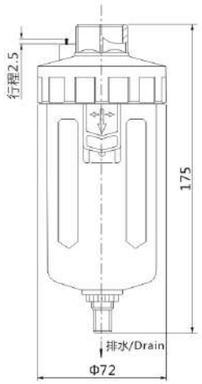

用途/Purpose

常用于自动排除管道低处、冷冻式空气干燥机、油水分离器、贮气罐及各种空气过滤器底部等处的积水。可安装在不便于进行人工排放污水的地方，如高处、低处、狭隘处；特别是安装在用气量较大、放水次数较频繁的地方，可防止人工排水被遗忘而造成压缩空气被冷凝水重新污染。

This product often applies to auto remove the seeper at the lower places of piping,frozen type air drying machine, oil separator, air storage tanks and the bottom of various air filters. It can be installed in the places inconvenient for manual discharge of sewage, such as higher, lower and narow places, especially there's large consumption of air or frequent water drains. It can prevent the compressed air being re-polluted by condense water resulting from neglect of manual drain

特性/Features

自动排水/ Auto drainer　停气排水/ Air shut off drain　手动排水/Manual drain

水杯配有金属保护罩/ The water cup is provided with metal protective cover

注意事项/Points for attention

使用时，必须垂直位置安装,且使排水口朝下。

When using the drainer should be installed ver tically the drainport facing down.

符号/Symbol

ZDFS 自动放水器/ ZDFS Auto Discharger

适用范围/Range of Application

本产品安装在自动排水器、空气过滤器、空气过滤减压阀的水杯底部，能自动排放积聚在水杯中的冷凝水。

This product is installed at the bottom of water cups for auto dis-chargers air filters and air filter regulators and can auto discharge the condense water gathered in the water cup.

特性/Features

自动排水/Auto drainer　停气排水/Air Shut off Drain　手动排水/Manual drain

技术要求/Technical Requirements:

工作介质/Working Mediun	压缩空气 /Compressed Air
环境及介质温度/ Ambient and media Temperature	5~60℃
动作压力/Operating Pressure	0.15~1.00MPa

注意事项/Points for attention

使用时，必须垂直位置安装，且使排水口朝下。

When using the drainer should be installed ver tically the drain port facing down.

杠杆式自动放水器
Lever type auto drain
HADV-200-G10

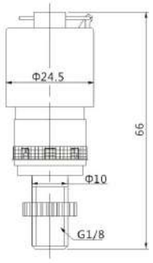

HADV-200-G10

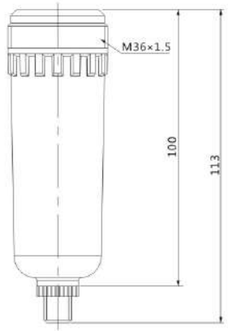

HADV-200-G10(带水杯)

水杯连接部位尺寸图
Dimensional drawing of water cup conneting part

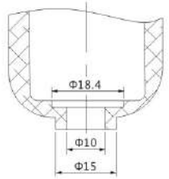

适用范围：此两种型号适用于AC2000、AC2010、AF2000、AW2000、HLC20、HLC20A、HLF20、HLW20等产品(HACE系列也同样适用)

Application Range: The model is used for AC2000、AC2010、AF2000、AW2000、HLC20、HLC20A、HLF20、HLW20 and HACE2000 series products.

PNEUMATIC
ISO9001:2015 ISO14001:2015 ISO45001:2018 ROHS CE
XMC®

杠杆式自动放水器
Lever type auto drain
HADV-300-GW12

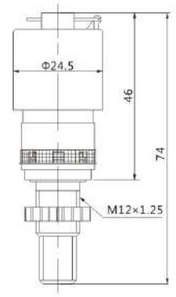

HADV-300-GW12

水杯连接部位尺寸图
Dimensional drawing of water cup conneting part

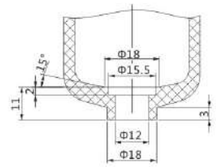

HADV-300-GW12

适用范围：此型号适用于AC3000、AC3010、AF3000、AW3000、HLC30、HLC30A、HLF30、HLW30等产品(H系列、HACE系列也同样适用)

Application Range: The model is used for AC3000,AC3010,AF3000,AW3000,HLC30，HLC30A,HLF30, HLW30 and H and HACE series products.

杠杆式自动放水器
Lever type auto drain
HADV-400-GW12

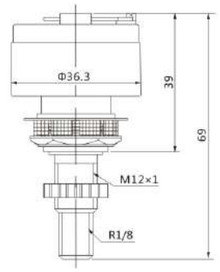

HADV-400-GW12

水杯连接部位尺寸图
Dimensional drawing of water cup conneting part

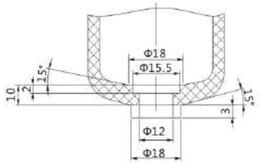

HADV-400-GW12

适用范围：此两种型号适用于AC4000/5000、AC4010/5010、AF4000/5000、AW4000/5000等产品(H系列、HACE系列也同样适用)

Application Range: The model is used for AC4000/5000, AC4010/5010, AF4000/5000、AW4000\5000 and H and HACE series products.

浮球式自动排水器
Float type auto drain
HADV-400-FW12

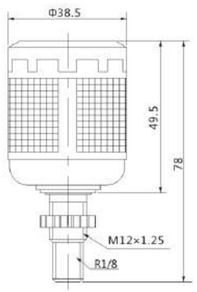

HADV-400-FW12

水杯连接部位尺寸图
Dimensional drawing of water cup conneting part

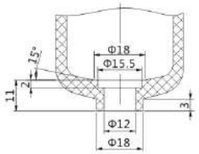

HADV-400-FW12

MCAD200
脉冲式自动放水器
Pulsed type auto drain

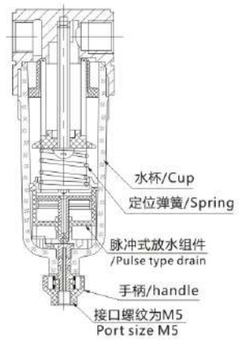

适用范围：此型号适用于AC2000、AC2010、AF2000、AW2000等产品(HACE系列也同样适用)

特性：脉冲式自动放水器是当进气端压力与次压侧压力发生压差变化(如电磁阀换向、气缸动作时产生的压力降)时，在压力变化瞬间打开排水口进行排水的放水装置。将手柄上推,可实现人工排水。此放水装置不能用于压力没有变化或变化很小的场合。

Application Range: The model is used for AC2000, AC2010, AF2000 AW2000 and HACE2000 series products.

Performance: When the inlet pressure and other side pressure is changed, it will be auto drain. For example, the solenoid valve change the direction, the cylinde racting etc. If you push the button, it can be manully drain. This device can not be used without pressure changed or changed very little.

气源处理元件－附件/Accessories for FRLS
T形隔板/T−Type Spacer

用途：使用T型隔板，引出分支气路
Purpose:To derivate another air flow using the"T"type spacer.

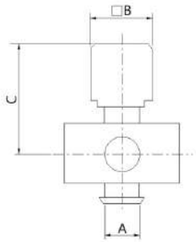

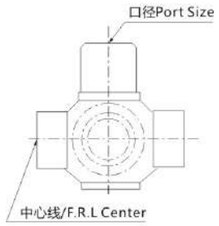

型号/Model	接管口径/Port Size(G)	A	B	C	适用型号/Applicable Model
Y21-01	G1/8	10	19	29	AC2000
Y21-02	G1/4				
Y31-01	G1/8	11	19	33	AC3000
Y31-02	G1/4				
Y41-02	G1/4	14	24	39	AC4000
Y41-03	G3/8				
Y61-03	G3/8	15	30	50.5	AC5000
Y61-04	G1/2				

气源处理元件一附件/Accessories for FRLs
L形支架/带L型支架中间块/L Type bracket/ Spacer with L− Type bracket

L形支架
L-Type Bracket

带L形支架中间块
Spacer with L-Type Bracket

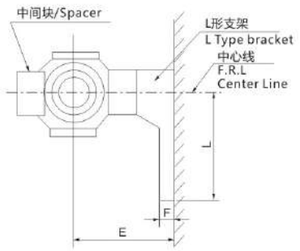

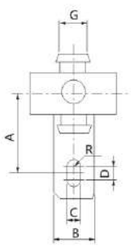

L形支架/L-Type Bracket	带L形支架中间块/ Spacer with L-Type Bracket	A	B	C	D	E	F	G	R	L	适用型号/Applicable Model
B110L	Y10L	20	12	4.5	3	25	5	8	2.25	27	AC1000
B210L	Y20L	24	15	5.5	3	30	5	10	2.75	33	AC2000
B310L	Y30L	35	16	7	4	41	7	11	3.5	45	AC2500~3000
B410L	Y40L	40	22	9	4	50	7	14	4.5	50	AC4000/HACE4000
B510L	Y50L	40	22	9	4	50	7	14	4.5	50	AC4000-06/HACE4000-06
B610L	Y60L	50	23	12	4	69.8	10.5	15	6	63	AC5000/HACE5000
B210LE	Y20LE	24	15	5.5	3	30	5	10	2.75	33	HACE2000
B310LE	Y30LE	35	16	7	4	41	7	11	3.5	45	HACE3000

气源处理元件－附件/Accessories for FRLS
T形支架/带T型支架中间块/T− Type bracket/Spacer with T−Type bracke

T形支架
T-Type Bracket

带T形支架中间块
Spacer with T-Type Bracket

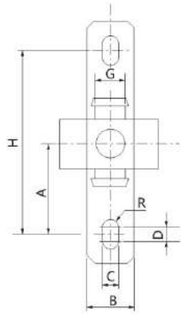

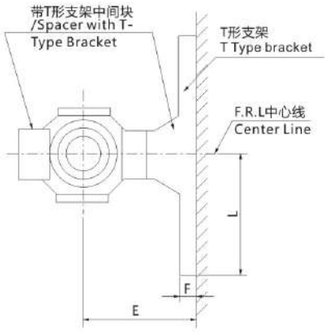

T形支架/T-Type Breacket	带T形支架中间块/Spacer with T-Tpe Bracket	A	B	C	D	E	F	G	R	L	H	适用型号/Applicable Model
B110T	Y10T	20	12	4.5	3	25	5	8	2.25	27	40	AC1010
B210T	Y20T	24	15	5.5	3	30	5	10	2.75	33	48	AC2010
B310T	Y30T	35	16	7	4	41	7	11	3.5	45	70	AC3010
B410T	Y40T	40	22	9	4	50	7	14	4.5	50	80	AC4010/HACE4010
B510T	Y50T	40	22	9	4	50	7	14	4.5	50	80	AC4010-06/HACE4010-06
B610T	Y60T	50	23	12	4	69.8	10.5	15	6	63	100	AC5010/HACE5010
B210TE	Y20TE	24	15	5.5	3	30	5	10	2.75	33	48	HACE2010
B310TE	Y30TE	35	16	7	4	41	7	11	3.5	45	70	HACE3010

气源处理元件一附件/Accessories for FRLs
Y形中间块/Y− TypeSpacer

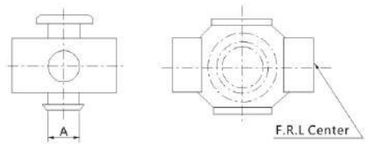

型号/Model	A	适用型号/Applicable Model
Y10	8	AC1000
Y20	10	AC2000
Y30	11	AC2500~3000
Y40	14	AC4000
Y50	14	AC4000~06
Y60	15	AC5000

气源处理元件一附件/Accessories for FRLs
20支架/20− Typebracket 适用于ApplicableAR/AW

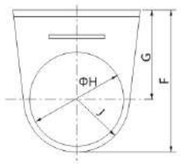

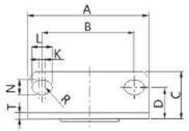

AR-AW形支架/Type Bracket	A	B	C	D	F	G	ΦH	J	K	L	N	R	T	适用型号/Applicable Model
B120	40	28	17	11	37.8	25	20.5	12.3	2	6.5	4.5	2.25	2	AR/AW1000
B220	55	34	25	19	50	30	33.5	20	10	15.4	5.4	2.7	2.3	AR/AW2000/AR2500
B320	53	40	21.5	14	64	39	42.5	25	1.5	8	6.5	3.25	2.3	AR/AW3000
B420	70	54	27	18	79.2	49.2	52.5	30	2	10.5	8.5	4.26	2.3	AR/AW4000-5000 AW4000-5000 HLR30/40 HLW30/40

气源处理元件 – 附件/Accessories for FRLS
40形支架40-Type bracket 适用于/ApplicableAF/AL

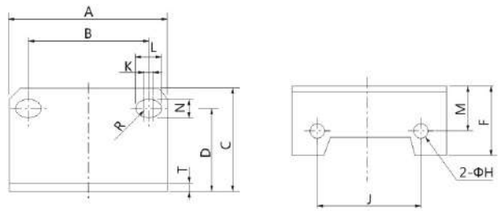

型号/Model	A	B	C	D	F	ΦH	K	L	M	N	R	T	安装螺钉/ Fixing screw	适用型号/ Applicable Model
B240	40	27	33	27	18	26	3	8.4	14	5.4	2.7	2	M4×8	AF/AL2000
B340	53	40	39	32	24	35	1.5	8	19	6.5	3.25	2	M4×8	AF/AL3000
B440	70	54	47	38	31.5	47	2	10.5	20	8.5	4.25	2	M5×10	AF/AL4000
B540	70	54	47	38	31.5	47	2	10.5	20	8.5	4.25	2	M5×10	AF/AL4000-06
B640	90	66	64	52	40	60	2	13	29	11	5.5	3	M6×10	AF/AL5000

气源处理元件 – 附件/Accessories for FRLs
HFOE支架

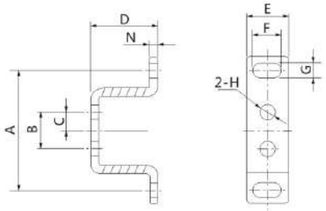

型号/Model	A	B	C	D	E	F	G	H	N
HFOE20	35	11	5.5	19	12	7.3	4.3	4.3	2
HFOE30	60	22	16.5	19	14	8.3	5.3	5.3	3

注：仅适用于HL系列气源处理元件
Note: Only for HL series Air Freatment Units

气源处理元件 – 附件/Accessories for FRLs
HR20支架/仅适用于HLR/HLW20

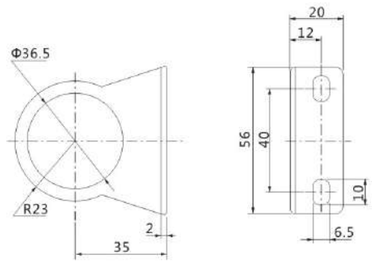

气源处理元件 – 附件/Accessories for FRLs
压力表/Pressure Gauge

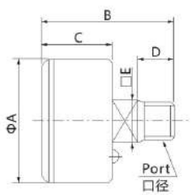

型号/Model	压力范围 /Pressure Range		A	B	C	D	E	适用型号/ Applicable Model
G27-10-R1	0~1MPa(红色/Red) 0~150psi(蓝色/Blue)	G1/16	26	25	16	6.5	11	AR1000 AW1000
G36-10-01		G1/8	42	38.5	24	10	11	AR2000~3000 AW2000~3000
G46-10-02		G1/8	52.5	43.5	25	10	14	AR4000~5000 AW4000~5000

气源处理元件 – 附件/Accessories for FRLS
T形支架/带T型支架中间块/ T- Type bracket/Spacer with T-Type bracke

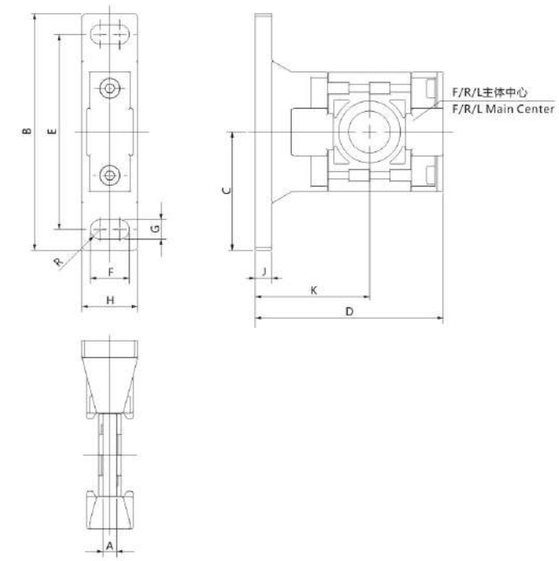

T形支架 T-Type Breacket	带T形支架中间块 Spacer with T-Tpe Bracket	口径 Port Size	A	B	C	D	E	F	G	H	J	K	适用型号 Applicable Model
DB210T	DY20T	1/8, 1/4	5	60	30	51	48	11.5	5.5	18	5	30	HDAC20、HDAC20A
DB310T	DY30T	1/4, 3/8	5	85	42.5	67.5	70	14	7	20	6	41	HDAC30、HDAC30A
DB410T	DY40T	3/8, 1/2	5	100	50	85.5	80	18	9	26	7	50	HDAC40、HDAC40A

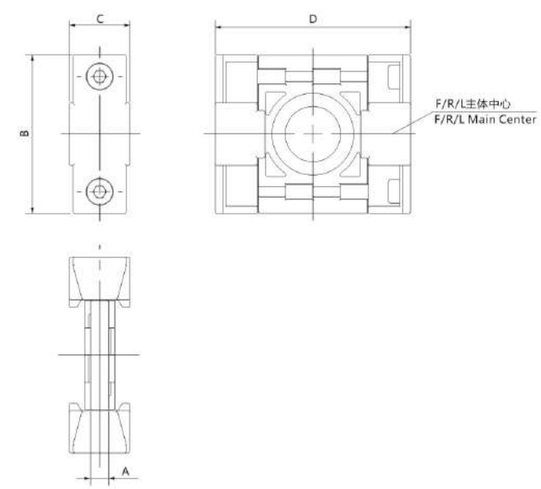

型号/Model	口径/Port Size	A	B	C	D	适用型号/Applicable Model
DY20	1/8, 1/4	5	35	15.5	40	HDAC20
DY30	1/4, 3/8	5	43	16.5	53	HDAC30
DY40	3/8, 1/2	5	51	19	70	HDAC40

电子式数显压力开关/Electronic Digital Pressure Switch

NP系列/NP Series

特性/Features

- 三色双画面显示，显示更清晰，设置更方便
  Three-color dual-screen display, the display is clearer, more convenient to set up
- 业界最快开关控制速度，独有Super speed模式，响应速度仅需1ms
  The industry's fastest switch control speed, unique Super speed mode, response speed of only 1ms；
- 单线通讯拷贝功能，快速完成批量设置
  Single-line communication copy function, quickly complete the batch setup
- 可设定多种压力显示单位：kPa MPa kgf/cm2 bar psi
  A variety of pressure display units can be set: kPa MPa kgf/cm2 bar psi
- MODBUS协议支持最多可支持32个表进行通讯
  The MODBUS protocol supports communication of up to 32 Pressure Switch
- 高达2000万次以上的压力冲击和开关量可靠性测试
  Up to 20 million pressure impact and switching reliability tests

型号命名方法/How To Order

NP - 10 C 010 M T

产品系列
Product range

01	标准系列/Standard
15	定制系列/Customized

气压输入范围
Air pressure input range

P	高压型/High-pressure type: (-0.1-1MPA)
C	低压型/Low pressure type: (-100-100KPA)

气压接口类型/The Interface type

M	M5内螺纹 M5 internal thread

输出规格/Output specifications

标准系列/Standard	001	2NPN
	002	2PNP
	003	1NPN+1PNP
	010	2NPN+1模拟输出/Analog output(1~5V)
	011	2NPN+1模拟输出/Analog output(4~20mA)
	012	1NPN+1PNP+1模拟输出/Analog output(1~5V)
	020	2PNP+1模拟输出/Analog output(1~5V)
	021	2PNP+1模拟输出/Analog output(4~20mA)
	030	1NPN+1RS485
	031	1PNP+1RS485
定制系列 Customized	000	定制规格/Custom Specifications

安装附件(需另选购)
Installation accessories (optional)

T	无安装支架/No mounting bracket

另选购配件型号
Choose from other accessory models

XP-MR-01：转换接头1/8
XP-MR-01：Convert the connector 1/8

XP-MR-02：转换接头1/4
XP-MR-02：Convert the connector 1/4

XP-BT-01：L型金属安装支架
XP-MR-02：L-type metal mounting bracket

XP-PA-01：面板安装支架
XP-PA-01：Panel mounting bracket
（含保护罩、固定件、卡口件）
(Includes protective cover, fixture, fastener)

薄型数字式压力开关/Thin Digital Pressure Switch

SP系列/SP Series

特性/Features

- 薄型10mm
  Thin Type 10mm
- 3步设定
  3-Steps Setup
- 2输出已标准化
  2 Output is standardized
- 可设定多种压力显示单位：kPa MPa kgf/cm² bar psi
  A variety of pressure display units can be set: kPa MPa kgf/cm² bar psi
- 纵向安装空间约消减1/2（与NP系列相比）
  The vertical installation space is approximately 1/2 less (Compared to the NP series)

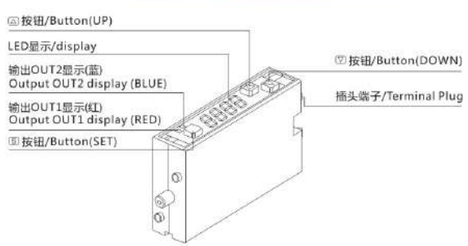

型号命名方法/How To Order

SP - 11 □ □□□

气压输入范围
Air pressure input range

P	正压型/Positive pressure type: -0.1-1.0MPA
C	负压型/Negative pressure type: -100-101KPA

输出规格/Output specifications

001	2NPN
002	2PNP
010	1NPN+1模拟输出/Analog output（1~5V）
011	1NPN+1模拟输出/Analog output（4~20mA）
020	1PNP+1模拟输出/Analog outpu（1~5V）
021	1PNP+1模拟输出/Analog output（4~20mA）

ISO9001:2015 ISO14001:2015 ISO45001:2018 ROHS CE

管接头/Piping Adapter

特性/Features

不拆下配管便可装拆元件，便于维修/
Piping adapters are the ideal method for allowing simple and easy installation and removal of FRL units. It is easy for maintenance.

技术参数/Technical parameters:

型号/Model	口径/Port size	A	B	C	适用于的型号/Applicable Model
HE20-01	1/8	23	22	22	AC2000、AC2010、AF2000、AR2010、AL2010、AW2010
HE20-02	1/4				
HE20-03	3/8				
HE30-02	1/4	26	34	29	AC2500、AC3000、AF3010、AR2500、AR2500、AF3000、AR3000、AL3000、AW3000
HE30-03	3/8				
HE30-04	1/2				
HE40-03	3/8	33	42	35	AC4000、AC4010、AF4000、AR4000、AL4000、AW4000
HE40-04	1/2				
HE60-06	3/4	40	54	55	AC5000、AC5010、AF5000、AR5000、AL5000、AW5000
HE60-10	1				

* 当需要连L型或T型托架管接头时,请按下列方式订货。

例: L型托架: HE30L-02
T型托架: HE40T-04

* If you want to order the piping adapter with "L" type of "T"type bracket ,
Please order as below:
For example :
"L" type bracket: HE3OL-02
"T" type bracket: HE40T-04

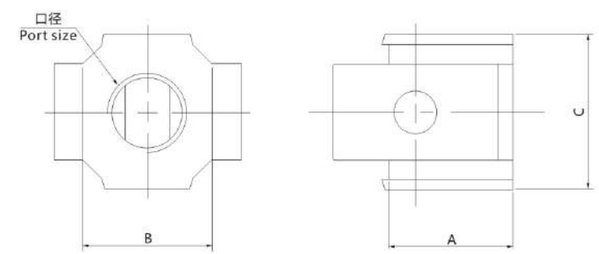

喷气吹尘枪系列/AIR BLOW GUNS
PQQ喷枪/PQQ Air Gun

用途/Application

本产品用于吹净零件内、外表面、机床或工作台上的切屑、灰尘及其它杂质，特别适用于机加工和装配等场所。

This product is used for blowing out the cutting, dust and other impurities on the inner and outer surfaces of parts, CNC machines or worktables, especially for machining and assembling.

特点/Features

- 产品技术先进，设计合理，外形美观，手握感舒适，操作方便；
- 枪体由铝合金压铸成形，重量轻；
- 喷气嘴由铜合金加工而成，比其它材料的喷气枪坚固耐用。
- This product is advanced in technology and reasonable in design. It has comfortable hold feel and easy operation.
- The gun are die-cast by aluminum alloy and are very light.
- Made of aluminum alloy and formed through die-casting, the gun is quite light. The air nozzle is made of copper alloy, which makes the gun stronger and more durable than those made of other materials.

外形尺寸图/Overall Dimension Drawing(mm)

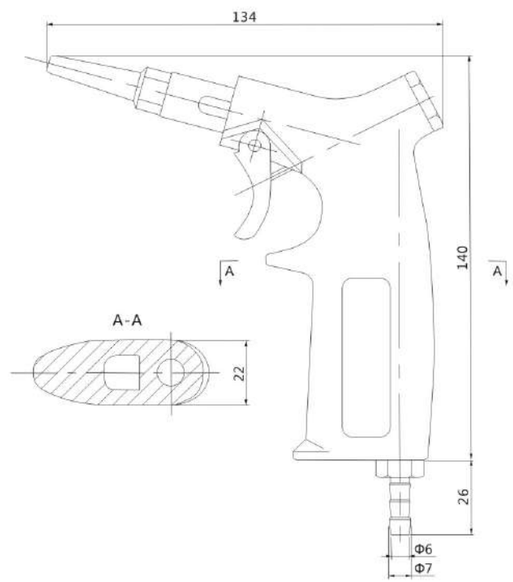

技术参数/Technical parameters

工作介质/ Working Medium	压缩空气/Compressed Air
介质温度与环境温度/ Medium and Ambient Temperature	5-60℃
公称压力/Nominal Pressure	0. 8MPa
喷口通径/ Spray Port Diameter	Φ2.5mm

喷气吹尘枪系列/AIR BLOW GUNS
PSQ喷砂枪/PSQ Sand Blasting Gun

特点/Features

- 产品技术先进,设计合理，外形美观，手握感舒适,操作方便；
- 枪体和喷砂管由铝合金压铸成形，重量轻；
- 喷嘴材料为陶瓷，耐磨性能好，使用寿命长。
- This product is advanced in technology and rea sonable in design.It has comfortable hold feel and easy operation.
- The body and sand blasting pipe are die-casted aluminum alloy itls very light.
- The spray port is made of ceramics, which has fine abrasive resistance and long service life

外形尺寸图/ Overall Dimension Drawing(mm)

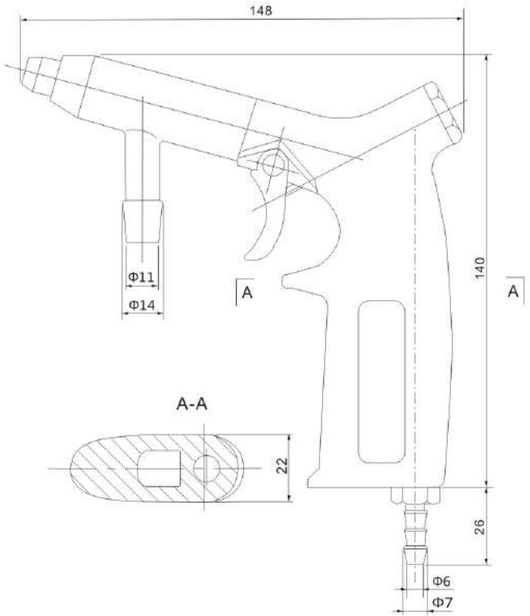

技术参数/ Technical parameters:

工作介质/Working Medium	压缩空气/Compressed Air
介质温度与环境温度/ Medium and Ambient Temperature	5-60℃
公称压力/Nominal Pressure	0. 8MPa
喷口通径/Spray Port Diameter	Φ2.5、Φ5、Φ5.5、Φ6.5mm

喷气吹尘枪系列/AIR BLOW GUNS
HQQ多功能喷枪/HQQ Multifunction Blow Guns

用途/Application

本产品用于吹净零件内、外表面、机床或工作台上的切屑、灰尘及其它杂质，特别适用于机加工和装配等场所。

This product is used for blowing out the cutting, dust and other impurities on the inner and outer surfaces of parts, CNC machines or worktables, especially for machining and assembling.

特点/Features

* 经久耐用,使用方便/ Durable, convenient to use:
* 符合人体工学设计/ Ergonomic design
* 能与多种功能喷头组合使用,应用范围广

It can be used in combination with a series of functional nozzle, and applies widely

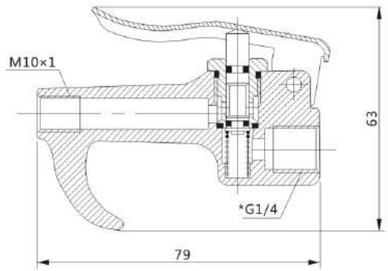

*接管口径有NPT，Rc可供选择。
*The port size is available in NPT, Rc options.

技术参数/Technical parameters

工作介质/Working Medium	压缩空气/Compressed Air
介质温度与环境温度/ Medium and Ambient Temperature	5~60℃
公称压力/Nominal Pressure	0. 8MPa
喷口通径/Spray Port Diameter	Φ2~2.5mm

橡胶防撞喷头/Rubber Tip

零件编号/ Component No:10

描述/ descriptio:

在使用过程中，防止喷头撞损工件

In the use of process to prevent the nozzle damage workpieces

安全助推喷头/Safe booster Tip

零件编号 Component No:20

描述/ description:

应用文丘里管工作原理,吸入额外的空气，增强空气助推范围。

Applying Venturi tube working principle, by drawing in extra ambient air, output volume is increased. Provide extra thrust with reduced air consumption.

吸虹管喷头/Rainbow tube absorption nozzle

零件编号/ Component No:50

描述/ description:

配管长6英寸普通延长管

With 6 extension pipe

气雾喷头/Aerosol spray Tip

零件编号 Component No:60

描述/ description:

喷头头部特殊处理，能喷出气雾状气体，一般与吸虹管喷头组合使用。

Special Treatment of the nozzle head, can spray mist-like air, generally combined use together with Siphon nozzle.

安全喷头/Safety Tip

零件编号 /Component No: 70

针管喷头/Needle Tip

零件编号/Component No: 30

描述/Description:
针孔/Needle holeΦ1mm

延长喷管/Extension nozzle

零件编号 /Component No	喷头名称 /Nozzle name	描述 /description
40	延长喷管3" Extend nozzle 3"	管长3英寸 Pipe length 3 inch
41	延长喷管6" Extend nozzle 6"	管长6英寸 Pipe length 6 inch
42	延长喷管12" Extend nozzle 12"	管长12英寸 Pipe length 12 inch

订货举例/Order Example

喷气吹尘枪系列/AIR BLOW GUNS
HQQS吹尘枪

特点/Features

*经久耐用，使用方便/ Durable, convenient to use:

*符合人体工学设计/ Ergonomic design

用途/Application

本产品用于吹净零件内、外表面、机床或工作台上的切屑、灰尘及其它杂质，特别适用于机加工和装配等场所。

This product is used for blowing out the cutting, dust and other impurities on the inner and outer surfaces of parts, CNC machines or worktables, especially for machining and assembling.

技术参数/Technical parameters

工作介质/Working Medium	压缩空气/ Compressed Air
介质温度与环境温度/ Media and Ambient Temperature	5-60℃
公称压力/Nominal Pressure	0. 8MPa
喷口通径/Spray Port Diameter	Φ2~2.5mm
接管口径/Port size(G)	G1/4(另有NPT、RC可供选择) (NPT, Rc are optional)

HC95系列ISO+欧州标准气缸/HC95 Series ISO+European Standard cylinder
HC95系列/Series(Φ32~Φ125)

符号/Symbol

特点/Features

- 根据下列标准：VDMA24562,DIN24335,ISO15552,(ISO6431);
- 重要密封件采用日本进口件;
- 采用PP型缓冲密封件，具有下列优点：
  a. 具有单向阀功能，气缸启动速度快;
  b. 具有自动对中作用，缓冲效果极佳，且气缸运行平稳，避免了因偏心而引起的活塞杆在行程末端的跳动现象。
- According to the following standards: VDMA 24562, DIN 24335,ISO15552,(ISO6431);
- The important sealing elements are imported from Japan;
- Type PP cushion sealing elements are applied which enjoy the following advantages;

a .In possession of the functions of non-return valve with quick start-up speed of the cylinder ;
b .In possession of the function of self-centering with excellent cushion effect and stead cylinder operation which has avoided the up-down movements of piston rod at the end of traveled distance caused by eccentricity.

订购码/Ordering Code

HC95 D W B — 63 × 125 – XC8

- **磁环/Magnet**: 无/Without- 标准 /Standard; D-内置磁环/with magnet
- **活塞杆/Piston rod**: 无/Without- 单活塞杆/Single rod; W-双活塞杆/double rod
- **安装型式/Mounting type**: B-基本型/Basic type; L-轴向脚座/Axial foot seat; F-前法兰/Front Flange; G-后法兰/Rear Flange; C-单耳座/Single ear Seat; D-双耳座/Double ear Seat; T-中间轴销/Middle Axie pin
- **缸径/Cylinder bore**: (mm)
- **行程/Stroke**: (mm)
- **特殊设计气缸/Special design cylinder**: 无/without-标准/Standard; XC8-行程可调/The stroke can be adjusted 0~50mm

订货举例/ Order Example

1. 所需缸径Φ63mm，行程125mm，单活塞杆，基本型气缸
   For order of Dia Φ63mm, Stroke125mm, Single Piston rod, basic type cylinder; 正确型号/Correct code: HC95B-63x125
2. 所需缸径Φ63mm，行程125mm，单活塞杆，内置磁环，基本型气缸
   For order of Dia Φ63mm, Stroke125mm, Single piston rod, With magnet, basic type cylinder, 正确型号/Correct code: HC95DB-63x125
3. 所需缸径Φ80mm，行程100mm，双活塞杆，内置磁环，基本型气缸
   For order of Φ80mm, Stroke100mm, double piston rod, With magnet basic typec cinder. 正确型号/Correct code: HC95DWB-80x100
4. 所需缸径Φ32mm，行程80mm，单活塞杆，安装方法前法兰
   For order of Dia Φ32mm, stroke 80mm, Single piston rod Front fange mounting type. 正确型号/Correct code: HC95F-32x80
5. 所需缸径Φ50mm，行程100mm，单活塞杆，内置磁环，双耳座安装气缸
   For order of dia Φ50mm, Stroke 100mm, Single piston with magnet, double ear seat mounting type cylinder. 正确型号/Correct type: HC95DD-50x100

规格/ Specification

缸径/Cylinder Diameter(mm)		32	40	50	63	80	100	125
工作介质/Working Medium		经过滤的压缩空气/Filtered Compressed Air						
动作型式/Action model		双动/Double acting						
保证耐压力/Ensured Pressure Resistance		1. 5MPa(15kgf/cm²)						
最高使用压力/Maximum Working Pressure		1.0MPa(10kgf/cm²)						
最低使用压力/Minimum Working pressure		0.1MPa(1kgf/cm²)						
环境和介质温度/Ambient and Medium and Temperature		5~60℃						
缓冲/Cushion		橡胶缓冲/Rubber						
使用速度/Working Speed		50~500mm/s						
*润滑/Lubrication		不需要/Not Required						
接管口径/Port Size		G1/8	G1/4		G3/8		G1/2	
行程误差 /Stroke Inaccuracy(mm)	行程/Stroke(mm)	0~250				251~800		
	误差/Inaccuracy(mm)	0~1				0~1.5		

如需要润滑请用透平1号油ISOVG32./ In case lubrication is required, please use turbine No.1oill ISOVG32.

行程 Stroke/磁性开关选择 Magnet Switch choose

缸径/Cylinder Diameter(mm)	标准行程/ Standary Stroke(mm)
32	25,40,50,80,100,125,160,175,200，250,300,350,400,450,500
40	
50	25,40,50,80,100,125,160,175,200，250,300,350,400,450,500
63	
80	25,40,50,80,100,125,160,175,200，250，300,350,400,450,500，600,700,750,800
100、125	

缸径/ Cylinder Diameter (mm)	磁性开关 /Magnet Switch	开关固定夹具 /Tools of fixing the switch	
		米字缸/ Double crossed type	拉杆缸/ Tierod type
32、40、50	AL-20R	P1-1	PAC
63、80		P1-2	
100		P1-4	
125		-	

HC95B基本型外形尺寸图/ Overall Dimension Drawing of HC95B Basic Type(mm)

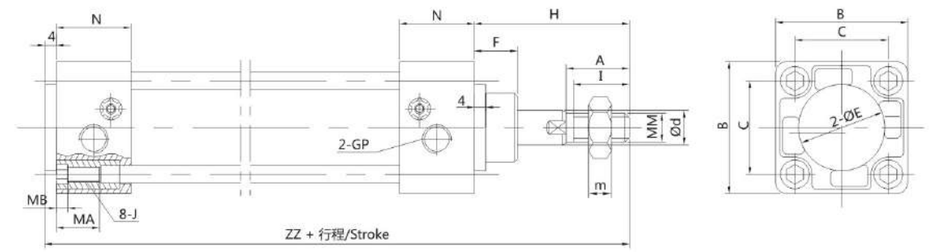

HC95WB双活塞杆气缸外形尺寸图 /Overall Dimension Drawing of HC95WB Double Rod(mm)

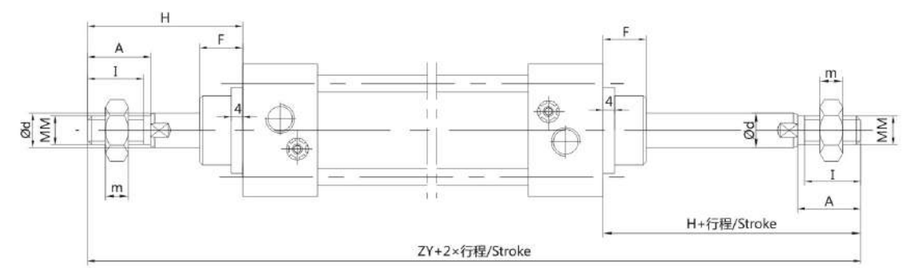

HC95B-DxS-XC8可调行程气缸外形尺寸图/ Overall Dimension Drawing of HC95B-DXS-XC8(mm)

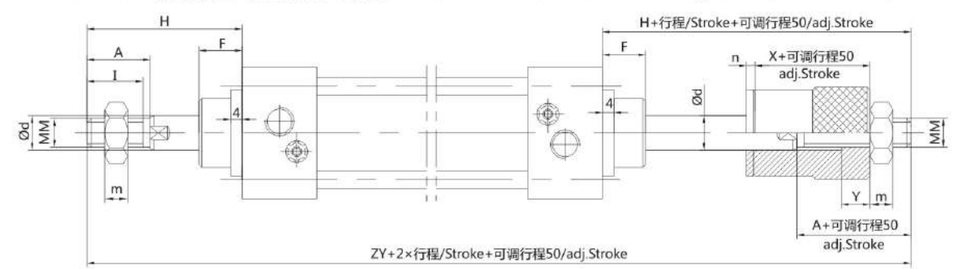

缸径/ Bore Size	B	C	d	MM	m	I	A	F	H	N	MA	MB	J	GP	ΦE	ZY	X	Y	n	zz
Φ32	46	32.5	Φ12	M10×1.25	5	19.5	22	15	48	26	15	4	M6	G1/8	Φ30	190	22	10	3	146
Φ40	52	38	Φ16	M12×1.25	6	21	24	17	54	26	15	4	M6	G1/4	Φ35	213	25	11	3	163
Φ50	65	46.5	Φ20	M16×1.5	8	29	32	24	69	29.5	15	5	M8	G1/4	Φ40	244	29	15	4	179
Φ63	75	56.5	Φ20	M16×1.5	8	29	32	24	69	29.5	15	5	M8	G3/8	Φ45	259	29	15	4	194
Φ80	95	72	Φ25	M20×1.5	10	37	40	30	86	35	16	5	M10	G3/8	Φ45	300	36	20	5	218
Φ100	114	89	Φ30	M20×1.5	10	37	40	32	91	35	16	5	M10	G1/2	Φ55	320	39	20	5	233
Φ125	140	110	Φ32	M27×2	13.5	50	54	45	119	46	20	6	M12	G1/2	Φ60	398	45	24	6	284

HC95F前法兰、HC95G后法兰 外形尺寸图/
Overall Dimension Drawing of HC95F Front Flange and HC95G Rear Flange(mm)

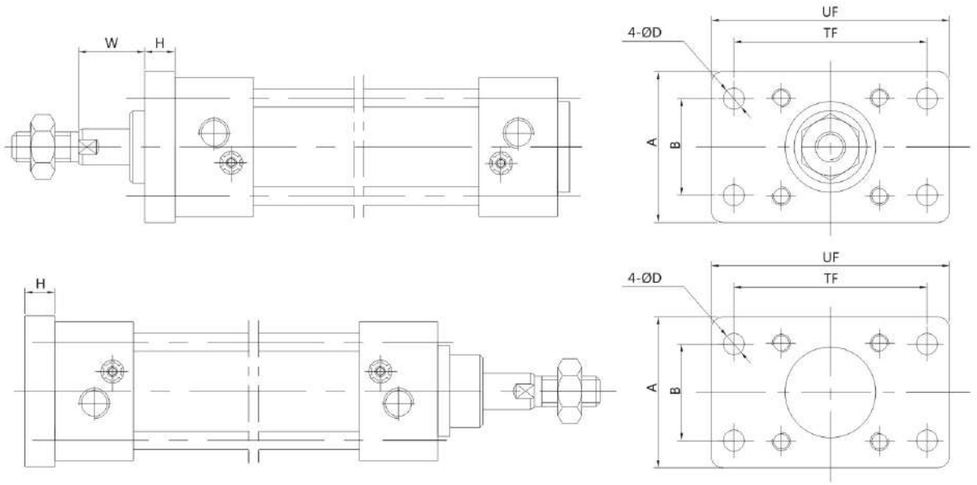

缸径/ Bore Size	法兰图号 /Flange	D	A	B	UF	TF	H	W
Φ32	F32	Φ7	50	32	79	64	10	16
Φ40	F40	Φ9	55	36	90	72	10	20
Φ50	F50	Φ9	70	45	110	90	12	25
Φ63	F63	Φ9	80	50	120	100	12	25
Φ80	F80	Φ12	100	63	153	126	16	30
Φ100	F100	Φ14	120	75	178	150	16	35
Φ125	F125	Φ16	140	90	220	180	20	45

说明/ Remark:
1. 前法兰与后法兰通用.
1. Front flange and Rear Flange are the same.
2.HMB系列气缸法兰与HC95系列气缸法兰通用。
2.Fange of HMB Series cylinder and Flange of HC95 series Cylinder are the same.

HC95L轴向脚座外形尺寸图/Overall Dimension Drawing of HC95L Axial Foot seat(mm)

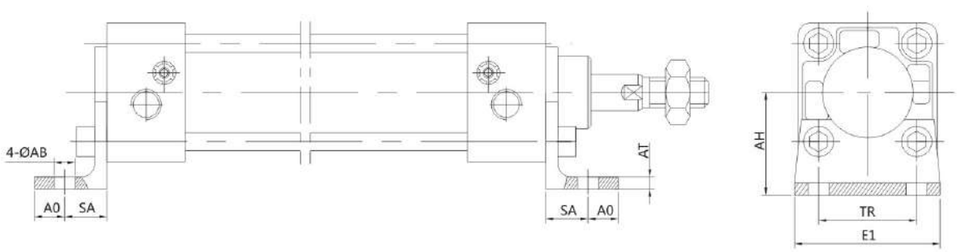

缸径/ Bore Size	轴向脚座图号 /Axial Foot seat	AH	E1	TR	SA	A0	ΦAB	AT
Φ32	HC95-L32	32	48	32	24	10	Φ7	4
Φ40	HC95-L40	36	55	36	28	11	Φ9	4
Φ50	HC95-L50	45	68	45	32	12	Φ9	5
Φ63	HC95-L63	80	80	50	32	12	Φ9	5
Φ80	HC95-L80	63	100	63	41	14	Φ12	6
Φ100	HC95-L100	71	120	75	41	16	Φ14	6
Φ125	HC95-L125	90	140	90	45	20	Φ16	8

HC95C单耳座、HC95D双耳座外形尺寸图/
Overall Dimension Drawing of HC95C Single Ear Seat and HC95D Double Ear Seat(mm)

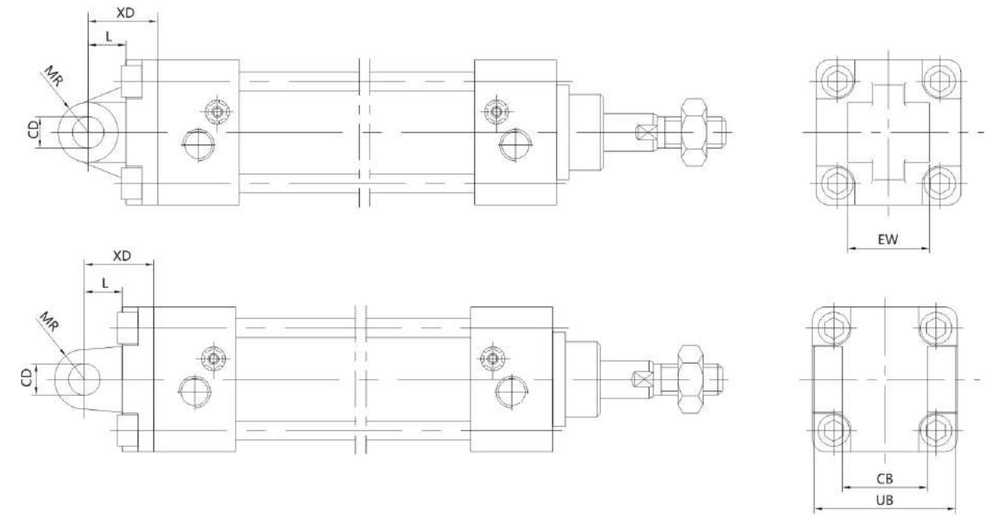

缸径/ Bore Size	单耳座图号 / Single Ear Seat	双耳座图号 / Double Ear Seat	XD	L	MR	CD	EW	CB	UB
Φ32	HC95-C32	HC95-D32	22	12	R9.5	Φ10H9	26	26	45
Φ40	HC95-C40	HC95-D40	25	15	R12	Φ12H9	28	28	52
Φ50	HC95-C50	HC95-D50	27	15	R12	Φ12H9	32	32	60
Φ63	HC95-C63	HC95-D63	32	20	R16	Φ16H9	40	40	70
Φ80	HC95-C80	HC95-D80	36	20	R16	Φ16H9	50	50	90
Φ100	HC95-C100	HC95-D100	41	25	R20	Φ20H9	60	60	110
Φ125	HC95-C125	HC95-D125	50	30	R25	Φ25H9	70	70	120

HC95T中间轴销外形尺寸图 /Overall Dimension Drawing of HC95T Middle Axie pin(mm)

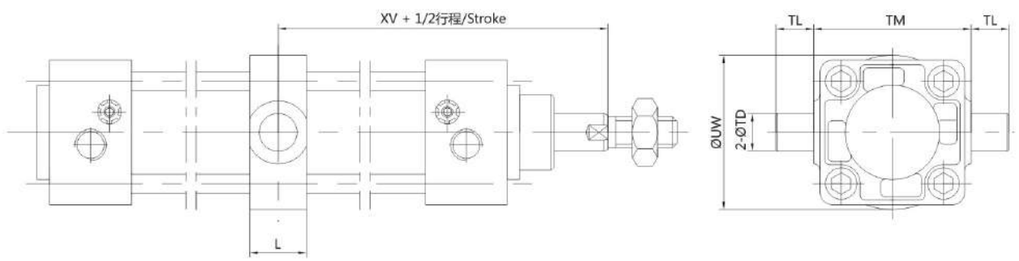

缸径/ Bore Size	中间轴销图号/ Middle Axie pin	TL	TM $^{-0.1}_{-0.3}$	ΦTD	ΦUW	L	XV
Φ32	T32	12	50	Φ12e9	Φ49	18	73
Φ40	T40	16	63	Φ16e9	Φ58	22	82.5
Φ50	T50	16	75	Φ16e9	Φ71	24	90
Φ63	T63	20	90	Φ20e9	Φ87	28	97.5
Φ80	T80	20	110	Φ20e9	Φ110	34	110
Φ100	T100	25	132	Φ25e9	Φ136	40	120
Φ125	T125	25	160	Φ25e9	Φ160	44	145

说明/ Remark:
HMB系列气缸的中间轴销与HC95系列气缸的中间轴销通用。
The middle Axie pin of HMB Series cylinder and the middle axie pin of Hc95 series cylinder are the same.

HMB系列日本标准气缸/HMB Series Japan Standard cylinde
HMB系列/ Series(Φ32~Φ100)

符号/Symbol

特点/ Features

- 重要密封件采用日本进口件;
- 采用PP型缓冲密封件，具有下列优点：
  a. 具有单向阀功能，气缸启动速度快；
  b. 具有自动对中作用，缓冲效果极佳，且气缸运行平稳，避免了因偏心而引起的活塞杆在行程末端的跳动现象。
- The important sealing elements are imported from Japan;
- Type PP cushion sealing elements are applied which enjoy the following advantages;
  A. In possession of the functions of non-return valve with quick start-up speed of the cylinder;
  B. In possession of the function of self-centering with excellent cushion effect and stead cylinder operation which has avoided the up-down movements of piston rod at the end of traveled distance caused by eccentricity.

订购码/Ordering Code

HM D B W B — 50 × 125 – XC8

- 磁环/Magnet: 无/Without-; 标准/Standard; D-内置磁环/with magnet
- 活塞杆/Piston rod: 无/Without-; 单活塞杆/Single rod; W-双活塞杆/double rod
- 安装型式/Mounting type: B-基本型/Basic type; L-轴向脚座/Axial foot sezt; F-前法兰/Front Flange; G-后法兰/Rear Flange; C-单耳座/Single ear Seat; D-双耳座/Double ear Seat; T-中间轴销/Middle Axie pin
- 缸径/Cylinder bore (mm)
- 行程/Stroke (mm)
- 特殊设计气缸/Strokeial design cylinder: 无/withou-标准/Standard; XC8-行程可调/The sttoke can be adjusted 0~50mm

订货举例/Order Example

1. 所需缸径Φ50mm，行程125mm，单活塞杆，基本型气缸
   For order of Dia Φ50mm, Stroke125mm, Single Piston rod, basic type cylinder;正确型号/ Correct Code: HMBB-50X125.
2. 所需缸径Φ80mm行程100mm，单活塞杆，内置磁环，双耳座安装气缸
   For order of Dia Φ 80mm, Stroke 100mm, Single piston rod, With magnet, Double ear Seats mounting cylinder, 正确型号/Correct Code: HMDBD-80X100.
3. 所需缸径Φ32mm，行程150mm，双活塞杆，基本型气缸
   For order of Φ32mm, Stroke150mm, double piston rod, basic type cylinder.正确型号/ Correct Code: HMBWB-32x150.
4. 所需缸径Φ100mm，行程75mm，行程可调0-50mm，前法兰安装气缸
   For order of Dia Φ100mm, Stroke75mm, Front flange mounting cylinder.正确型号/ Correct Code: HMBF-100x75-XC8.

规格/Specification

缸径/Cylinder Diameter(mm)		32	40	50	63	80	100
工作介质/Working Medium		经过滤的压缩空气/Filtered Compressed Air					
动作型式/Action model		双动/Double acting					
保证耐压力/Ensured Pressure Resistance		1. 5MPa(15kgf/cm²)					
最高使用压力/Maximum Working Pressure		1.0MPa(10kgf/cm²)					
最低使用压力 Minimum Working pressure		0.1MPa(1kgf/cm²)					
环境和介质温度/Ambient and Medium and Temperature		5~60℃					
缓冲/Cushion		气缓冲/Air Cushion					
使用速度/Working Speed		50~500mm/s					
*润滑/Lubrication		不需要/Not Required					
接管口径/Port Size		G1/8	G1/4		G3/8	G1/2	
行程误差 /Stroke Inaccuracy(mm)	行程/Stroke(mm)	0~250				251~800	
	误差/Inaccuracy(mm)	0~1				0~1.5	

*如需要润滑请用透平1号油ISOVG32./ *In case lubrication is required, please use turbine No.1 oil ISOVG32.

行程 Stroke/磁性开关选择 Magnet Switch choose

缸径 Cylinder Diameter (mm)	标准行程/ Standary Stroke(mm)
32	25,50,75,100,125,150,175,200, 250,300,350,400,450,500
40	
50	25,50,75,100,125,150,175,200, 250,300,350,400,450,500,600
63	
80	25,50,75,100,125,150,175,200,250, 300,350,400,450,500,600,700,750
100	

缸径 Cylinder Diameter (mm)	磁性开关 /Magnet Switch	开关固定夹具 /Tools of fixing the switch	
		米字缸 Double crossed type	拉杆缸/ Tierod type
32、40、50	AL-20R	P1-1	PAC
63、80		P1-2	
100		P1-4	

HMBB基本型外形尺寸图 / Overall Dimension Drawing of HMBB(mm)

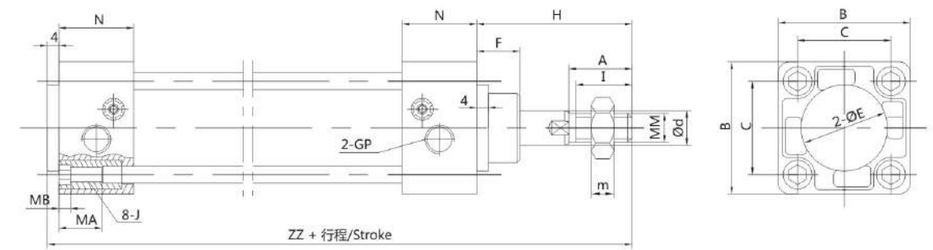

缸径/ Bore Size	MM	I	A	B	C	d	m	ΦE	F	H	N	GP	MA	MB	J	zz
Φ32	M10×1.25	19.5	22	46	32.5	Φ12	5	Φ30	13	47	26	G1/8	15	4	M6	135
Φ40	M14×1.5	27	30	52	38	Φ16	6	Φ35	13	51	26	G1/4	15	4	M6	139
Φ50	M18×1.5	32	35	65	46.5	Φ20	8	Φ40	14	58	29.5	G1/4	15	5	M8	156
Φ63	M16×1.5	32	35	75	56.5	Φ20	8	Φ45	14	58	29.5	G3/8	15	5	M8	156
Φ80	M22×1.5	37	40	95	72	Φ25	10	Φ45	20	72	35	G3/8	16	5	M10	190
Φ100	M26×1.5	37	40	114	89	Φ30	10	Φ55	20	72	35	G1/2	16	5	M10	190

HMBL轴向脚座外形尺寸图 /Overall Dimension Drawing of HMBL Axial Foot Seat(mm)

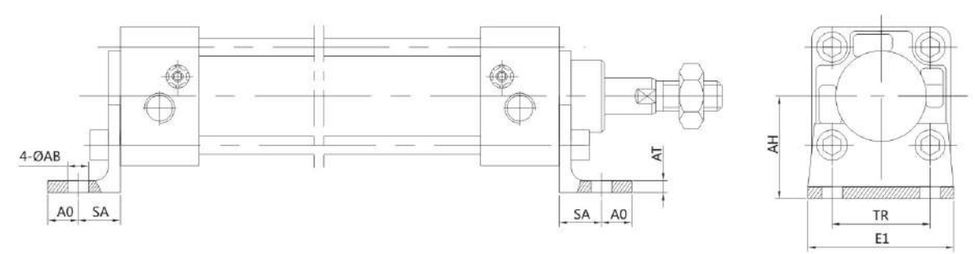

缸径/ Bore Size	轴向脚座图号 /Axial Foot seal	SA	AO	ΦAB	AT	AH	TR	E1
Φ32	HMB-L32	22	9	Φ7	3.2	30	32	50
Φ40	HMB-L40	24	11	Φ9	3.2	33	38	55
Φ50	HMB-L50	27	11	Φ9	3.2	40	46	70
Φ63	HMB-L63	27	14	Φ12	3.6	45	56	80
Φ80	HMB-L80	30	14	Φ12	4.5	55	72	100
Φ100	HMB-L100	32	16	Φ14	4.5	65	89	120

HMBF前法兰、HMBG后法兰 外形尺寸图/ Overall Dimension Drawing of HMBF Front Flange and HMBG Rear Flange(mm)

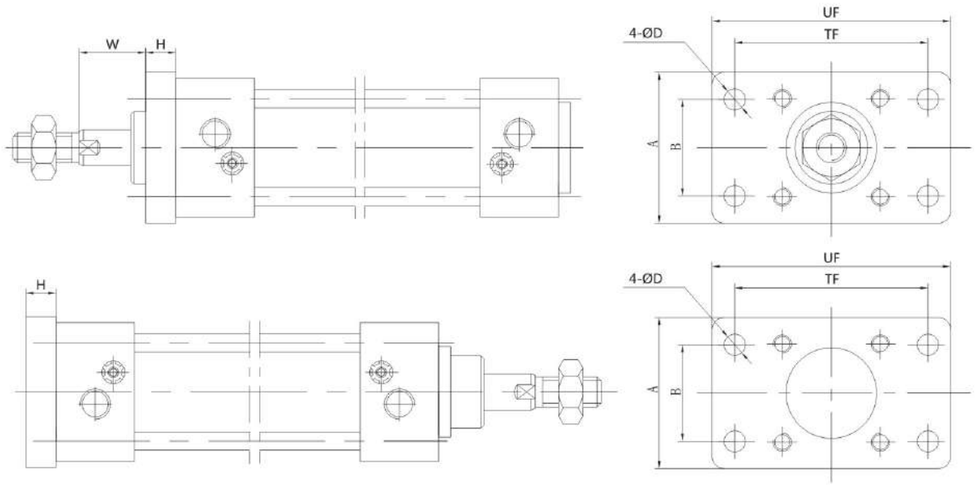

缸径/ Bore Size	法兰图号 /Flange	D	A	B	UF	TF	H	W
Φ32	F32	Φ7	50	32	79	64	10	15
Φ40	F40	Φ9	55	36	90	72	10	11
Φ50	F50	Φ9	70	45	110	90	12	11
Φ63	F63	Φ9	80	50	120	100	12	11
Φ80	F80	Φ12	100	63	153	126	16	16
Φ100	F100	Φ14	120	75	178	150	16	16

说明/Remark:
1.前法兰与后法兰通用.
1.Front flange and rear Flange are the same.
2.HMB系列气缸法兰与HC95系列气缸法兰通用。
2.Fange of HMB Series cylinder and Flange of HC95 series Cylinder are the same.

HMBC单耳座外形尺寸图/ Overall Dimension Drawing HMBC Single Ear Seat(mm)

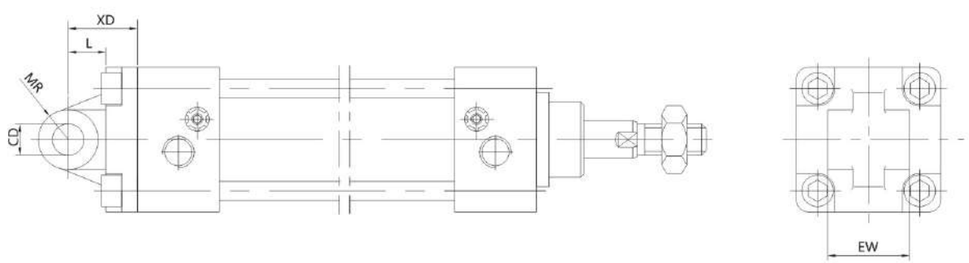

缸径/ Bore Size	单耳座座图号 /Single ear seat	XD	L	MR	CD	EW
Φ32	HMB-C32	23	13	R10.5	Φ10H9	14
Φ40	HMB-C40	23	13	R11	Φ10H9	14
Φ50	HMB-C50	30	17	R15	Φ14H9	20
Φ63	HMB-C63	30	17	R15	Φ14H9	20
Φ80	HMB-C80	42	26	R23	Φ22H9	30
Φ100	HMB-C100	42	26	R23	Φ22H9	30

HMBD双耳座外形尺寸图/Overall Dimension Drawing HMBD Double Ear Seat(mm)

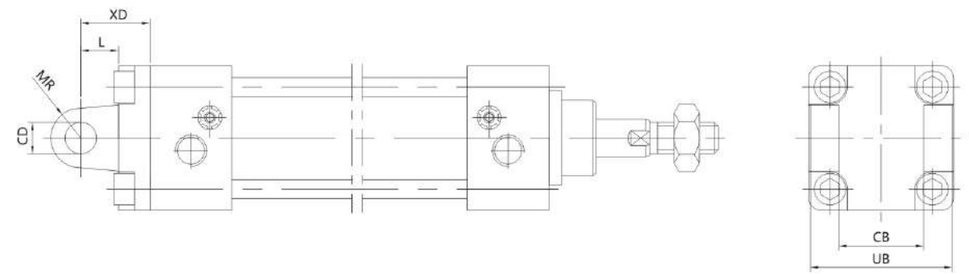

缸径/ Bore Size	双耳座图号 / Double Ear Seat	XD	L	MR	CD	CB	UB
Φ32	HMB-D32	23	13	R10.5	Φ10H9	14	28
Φ40	HMB-D40	23	13	R11	Φ10H9	14	28
Φ50	HMB-D50	30	17	R15	Φ14H9	20	40
Φ63	HMB-D63	30	17	R15	Φ14H9	20	40
Φ80	HMB-D80	42	26	R23	Φ22H9	30	60
Φ100	HMB-D100	42	26	R23	Φ22H9	30	60

HMBT中间轴销外形尺寸图 Overall Dimension Drawing of HMBT Middle Axie pin(mm)

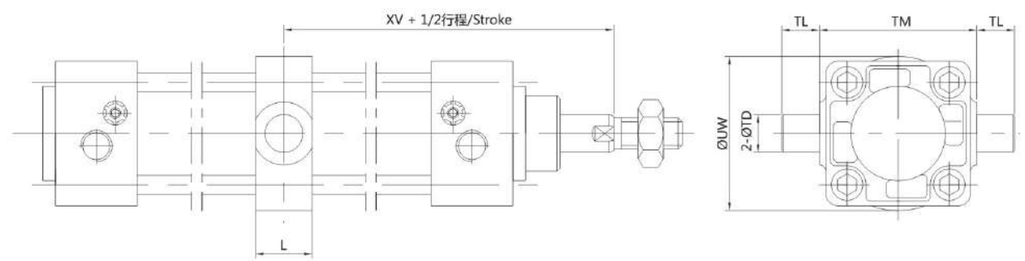

缸径/ Bore Size	中间轴销图号/ Middle Axie pin	TL	TM $^{-0.1}_{-0.3}$	ΦTD	ΦUW	L	XV
Φ32	T32	12	50	Φ12e9	Φ49	18	67
Φ40	T40	16	63	Φ16e9	Φ58	22	63
Φ50	T50	16	75	Φ16e9	Φ71	24	70
Φ63	T63	20	90	Φ20e9	Φ87	28	70
Φ80	T80	20	110	Φ20e9	Φ110	34	89
Φ100	T100	25	132	Φ25e9	Φ136	40	89

说明/ Remark:
HMB系列气缸的中间轴销与HC95系列气缸的中间轴销通用。
The middle Axie pin of HMB Series cylinder and the middle axie pin of HC95 series cylinder are the same.

HMBWB双活塞杆气缸外形尺寸图(mm)
Overall Dimension Drawing of HMBWB Double Piston Rod(mm)

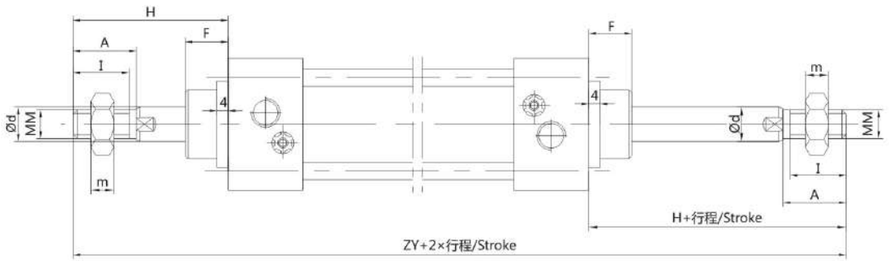

缸径/ Bore Size	ZY	H	F	Φd	MM	I	A	m
Φ32	178	47	13	Φ12	M10×1.25	19.5	22	5
Φ40	186	51	13	Φ16	M14×1.5	27	30	8
Φ50	210	58	14	Φ20	M18×1.5	32	35	9
Φ63	210	58	14	Φ20	M18×1.5	32	35	9
Φ80	258	72	20	Φ25	M22×1.5	37	40	10
Φ100	258	72	20	Φ30	M26×1.5	37	40	10

HMBB-□x□-XC8可调行程系列气缸外形尺寸图(mm)
Overall Dimension Drawing of HMBB(mm)

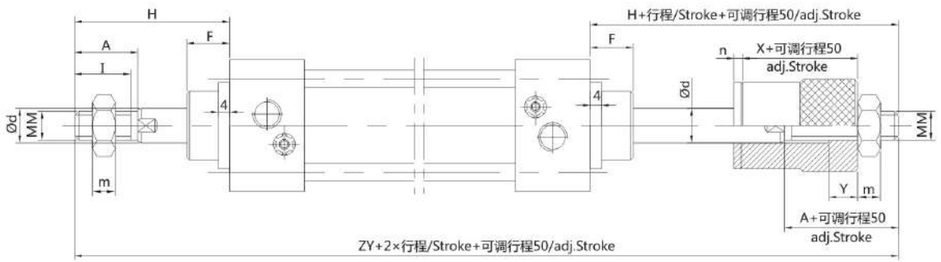

缸径/ Bore Size	ZY	H	F	Φd	MM	I	A	m	X	n	Y
Φ32	178	47	13	Φ12	M10×1.25	19.5	22	5	23	3	10
Φ40	186	51	13	Φ16	M14×1.25	27	30	8	22	3	12
Φ50	210	58	14	Φ20	M18×1.5	32	35	9	26	4	15
Φ63	210	58	14	Φ20	M18×1.5	32	35	9	26	4	15
Φ80	258	72	20	Φ25	M26×1.5	37	40	10	32	5	20
Φ100	258	72	20	Φ30	M26×1.5	37	40	10	32	5	20

HCQ2系列日本规格薄型气缸/HCQ2 Series Japan specification Compact cylinder
HCQ2系列/Series(Φ32~Φ100)

符号/Symbol

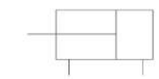

标准规格/Specifications

缸径/Cylinder Diameter(mm)	32	40	50	63	80	100
工作介质/Working Medium	经过滤的压缩空气 /Filtered Compressed Air					
动作型式/Action model	双动/Double acting					
保证耐压力/Ensured Pressure Resistance	1. 5MPa(15kgf/cm²)					
最高使用压力/ Maximum Working Pressure	1.0MPa(10kgf/cm²)					
介质温度与环境温度/ Medium and Ambient Temperature	5~60℃					
杆端螺纹/Screw of rod end	内螺纹(标准)/ Internal thread(Standard) 外螺纹(任选)/ External thread(Optional)					
缓冲/Cushion	无/Not Required					
行程公差/Stroke tolerance	0~1.0					
*润滑/Lubrication	不需要/Not Required					
安装/Mounting type	通孔(标准),两端内螺纹(任选) Through hole(Standard); Both ends tapped(Optional)					
接管口径/Port size	G1/8		G1/4		G3/8	

*如需要润滑请用透平1号油ISOVG32./ In case lubrication is required, please use turbine No.1oill ISOVG32.

订购码/Ordering Code

H C D Q 2 B – 32 × 10 D M

- 磁环/Magnet: 无/Without-; 标准/Standard; D-内置磁环/with magnet
- 安装型式/Mounting type: B-通孔/through hole; A-两端内螺纹/ both ends tapped
- 缸径/Cylinder bore (mm): 32
- 行程/Stroke (mm): 10
- 动作型式/Action type: D-双动/double acting
- 活塞杆螺纹/Piston rod thread: 无-杆端内螺纹/Rod end internal thread; M—杆端外螺纹/Rod end external thread

订货举例/Order Example

1. 所需缸Φ32mm，行程10mm，双动，通孔安装型，杆端内螺纹。
   For order of Dia Φ32mm, stroke 10mm, double acting, cylinder through hole mounting type, rod end internal thread compact cylinder.
   正确型号 /Correct Code: HCQ2B-32x10-D

2. 所需缸Φ63mm，行程30mm，双动，两端内螺纹安装型，杆端外螺纹。
   For order of Dia Φ63mm .stroke 30mm, double acting, both ends tapped mounting type. rod end external thread.
   正确型号/ Correct Code: HCQ2A-63x30-DM

3. 所需缸Φ80mm，行程50mm，双动，内置磁环，两端内螺纹安装型，杆端内螺纹。
   For order of Dia Φ80mm, stroke 50mm, double acting with magnet, both ends tapped type, rod end internal thread.
   正确型号/ Correct Code: HCDQ2A-80x50-D

通孔安装型/ Through hole mounting type HCQ2B · HCDQ2B

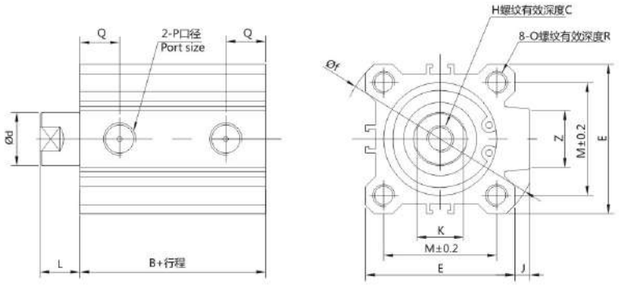

缸径/ Bore Size	标准范围 Standrange	B	(B)	Φd	L
Φ32	5	23	33	Φ16	7
	10~50				
Φ40	5~50	29.5	39.5	Φ16	7
Φ50	10~50	30.5	40.5	Φ20	8
Φ63	10~50	36	46	Φ20	8
Φ80	10~50	43.5	53.5	Φ25	10
Φ100	10~50	53	63	Φ30	12

缸径/ Bore Size	Q	P	(P)	E	J	Z	Φf	M	K	Z	H	C	ΦO	ΦN
Φ32	8.8	M5	G1/8	45	4.5	18	Φ60	34	14	18	M8	13	Φ9深7	Φ5.5
		G1/8												
Φ40	9.5	G1/8	G1/8	52	5	18	Φ69	40	14	18	M8	13	Φ9深7	Φ5.5
Φ50	11.5	G1/4	G1/4	64	7	22	Φ86	50	18	22	M10	15	Φ11深8	Φ6.6
Φ63	12.5	G1/4	G1/4	77	7	22	Φ103	60	18	22	M10	15	Φ14深10.5	Φ9
Φ80	14	G3/8	G3/8	98	6	26	Φ132	77	22	26	M16	21	Φ17深13.5	Φ11
Φ100	18	G3/8	G3/8	117	6.5	26	Φ156	94	27	26	M20	27	Φ17深13.5	Φ11

两端内螺纹安装型HCQ2A·HCDQ2 A Both ends tapped mounting type

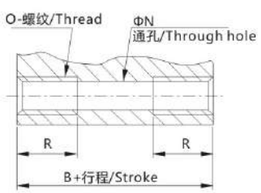

缸径/ Bore Size	O	R
Φ32	M6	10
Φ40	M6	10
Φ50	M8	14
Φ63	M10	18
Φ80	M12	22
Φ100	M12	22

注 Remark:
1. 标准行程是每5mm相隔；
   Standard stroke every 5mm altemation.
2. 除非有特别指明,通孔型气缸尺寸和两端内螺纹气缸尺寸是一样；
   The thread size of through hole type and both ends tapped is the Same except special requirement.
3. (B)、(P)两尺寸为内置磁环型气缸尺寸,其余尺寸与没有磁环型气缸均相同;
   (B)、(P)is the size of compact-cylinder with magnet, Other size is the same as compact -cylinder without magnet.
4. 5mm行程内置磁环型气缸只能安装一个磁性开关。
   It can ony mount one magnet switch if the stroke in 5mm.

活塞杆外螺纹/ Piston rod external thread

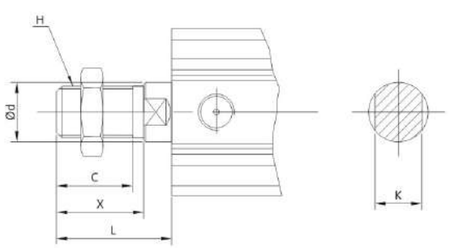

缸径/ Bore Size	C	X	Φd	H	L	K
Φ32	20.5	23.5	Φ16	M14×1.5	28.5	14
Φ40	20.5	23.5	Φ16	M14×1.5	28.5	14
Φ50	26	28.5	Φ20	M18×1.5	33.5	18
Φ63	26	28.5	Φ20	M18×1.5	33.5	18
Φ80	32.5	35.5	Φ25	M22×1.5	43.5	22
Φ100	32.5	35.5	Φ30	M26×1.5	43.5	27

HCQ2系列日本规格薄型气缸/HCQ2 Series Japan Specification Compact Cylinder HCQ2系列/ Series(Φ32~Φ100)

符号/Symbol

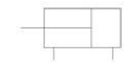

标准规格/Specifications

缸径/Cylinder Diameter(mm)	32	40	50	63	80	100
工作介质/Working Medium	经过滤的压缩空气/Filtered Compressed Air					
动作型式/Action model	双动/Double acting					
保证耐压力/Ensured Pressure Resistance	1.5MPa(15kgf/cm²)					
最高使用压力/Maximum Working Pressure	1.0MPa(10kgf/cm²)					
环境和介质温度/Ambient and Medium and Temperature	5~60℃					
杆端螺纹/Screw of rod end	内螺纹(标准)/Internal thread standard,外螺纹（任选）/ External thread					
缓冲/Cushion	橡胶缓冲/Rubber					
行程误差/Travel Distance Error(mm)	0~1.4					
润滑/Lubrication	不需要/Not Required					
安装/Mounting type	两端内螺纹(任选)/Both ends tapped(Optional)					
接管口径/Joint iube caliber	G1/8		G1/4		G3/8	

订购码/Ordering Code

HC D Q 2 A — 32 × 125 D — CM

- 磁环/Magnet: 无/Without-标准 /Standard; D-内置磁环/with magnet
- 安装型式/Mounting type: A-两端内螺纹/both ends tapped
- 缸径/cylinder bore (mm)
- 行程/Stroke (mm)
- 动作型式/Action type: D-双动/double acting
- 缸身/Cylinder Body: C-橡胶缓冲(杆端内螺纹)/Rod end internal thread; CM-橡胶缓冲(杆端外螺纹)/Rod end external thread

订货举例/Order Example

1. 所需缸Φ50mm，行程150mm，双动，杆端内螺纹。
   For order of dia Φ50mm, stroke 150mm, double acting, rod end internal thread compact cylinder.
   正确型号/Correct Code: HCQ2A-50x150-DC
2. 所需缸Φ63mm，行程300mm，双动内置磁环型杆端外螺纹.
   For order of dia Φ63mm Stroke 300mm, double acting with magnet, both ends tapped type, rod endexternal thread.
   正确型号 /Correct Code: HCQ2A-63x300-DCM。

外形尺寸图/Overall Dimension Drawing (mm)

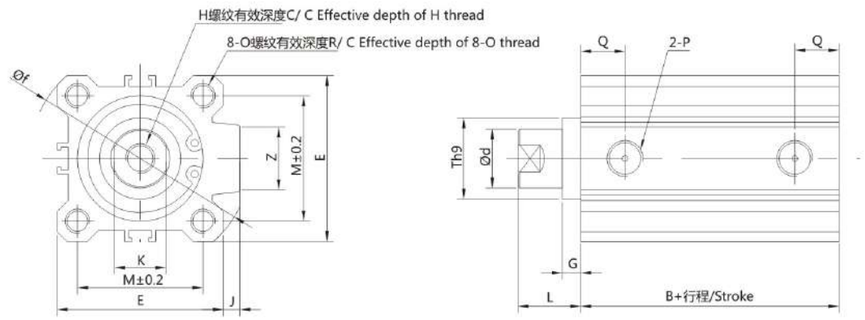

缸径/ Bore Size	行程 Stroke	B	C	Φd	E	G	H	Φf	J	K	L	M	O	P	Q	R	Th9	Z
Φ32	125,150 175,200 250,300	45.5	13	Φ16	45	5	M8	Φ60	4.5	14	17	34	M6	G1/8	12	10	22 $^{0}_{-0.052}$	18
Φ40		55	13	Φ16	52	5	M8	Φ69	5	14	17	40	M6	G1/8	14	10	28 $^{0}_{-0.052}$	18
Φ50		55.5	15	Φ20	64	5	M10	Φ86	7	18	18	50	M8	G1/4	14	14	35 $^{0}_{-0.062}$	22
Φ63		57	15	Φ20	77	5	M10	Φ103	7	18	18	60	M10	G1/4	15	18	35 $^{0}_{-0.062}$	22
Φ80		66	21	Φ25	98	5	M16	Φ132	6	22	20	77	M12	G3/8	19	22	43 $^{0}_{-0.062}$	26
Φ100		75.5	27	Φ30	117	5	M20	Φ156	6.5	27	22	94	M12	G3/8	23	22	59 $^{0}_{-0.074}$	26

杆端外螺纹/Rod end external thread

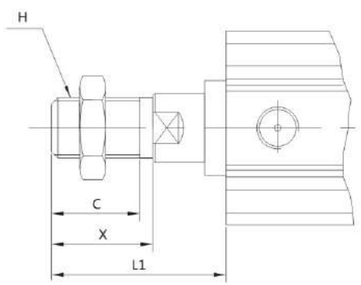

缸径/ Bore Size	C	H	L1	X
Φ32	20.5	M14×1.5	38.5	23.5
Φ40	20.5	M14×1.5	38.5	23.5
Φ50	26	M18×1.5	43.5	28.5
Φ63	26	M18×1.5	43.5	28.5
Φ80	32.6	M22×1.5	53.5	35.5
Φ100	32.5	M26×1.5	53.5	35.5

HVF系列先导型二位五通电磁阀/ HVF Series Lead Type Two-position Five-way solenoid valve HVF3000、5000系列/HVF3000、5000 Series

符号/Symbol

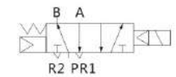

单电控: Single Electric Control

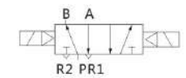

双电控: Double Electric Control

型号命名方法/ Type Denominate Method

HVF 3130 / 5120 - 3 G - 02

- 电控数/ Electric control number
  - 1: 单电控 Single electric control
  - 2: 双电控 Double electric control
- 标准电压: Standard Voltage
  - 3:AC110V
  - 4.AC220V
  - 5.DC24V
  - 6.DC12V
- 接电方式/ Plug mode
  - G: 直接出线式 Grommet type
  - D: DIN插座式 DIN type
- 接管口径/ Port Size
  - 01: G1/8
  - 02: G1/4
  - 03: G3/8

订货举例/Order Example

1.需二位五通单电控阀AC220V直接出线式,接管口径G1/4.正确型号HVF5120-4G02

1.For order of two-position five way solenoid valve with single Electric control, voltage: 220vAC, Grommet type port size G1/4. Correct Code: HVF5120-4G02

2.需二位五通双电控阀DC24V,DIN插座式,接管口径G3/8.正确型号:HVF5220-5D03

2. For order of two-position five way solenoid valve with double Electric control, voltage: 24vDC, DIN type port size G3/8. Correct Code: HVF5220-5D03

共同规格/Common Specifications

工作介质/ Working Medium	经过滤的压缩空气/Filtered Compressed Air
环境和介质温度/ Ambient and Medium Temperature	5~50℃
手动操作/Manual Operation	非锁定推压式/Without lock and push type
*润滑/Lubrication	不需要/Not Required
抗冲击/Shock Resistant 震动能力/Vibration Ability	30G/5G(8.3~2000Hz)
密封/Sealing	防灰尘/Dust-proof

*如需要润滑请用透平1号油ISOG32.

* In case lubrication is required, please use turbine No.1oill SOVG32.

电磁线规格/ Solenoid Specifications

接电方式/Plug mode		直接出线式(G) /Grommet type DIN插座式/Din type
标准电压/Standard Voltage		交流/AC: 110V,220V(50Hz); 直流DC: 12V,24V
允许电压变动范围/Permissible Voltage Variance Range		额定电压/the rated voltage: -15%~+10%
绝缘/Insulation		B级或相同等级
功率消耗/ Power Dissipation	交流/AC	起动/Startup:5.6VA，持续/continuous:3.4VA
	直流DC	1.8W

型号/Model	规格/Specifications					
	电控数/Electric Control Number	工作压力 /Working Pressure	反应时间/ Response Time	最高操作频率/Max. Operation Frequency	接管口径/ Port Size	有效截面积/ Effective Section Area
HVF3130-□□-01	电控数/Single Electric Control	0.15~0.90MPa	≤0.03S	5次 times /秒 second	G1/8	17.1mm²
HVF3130-□□-02					G1/4	
HVF3230-□□-01	双电控/Double Electric Control	0.1~0.90MPa	≤0.03S	5次 times /秒 second	G1/8	17.1mm²
HVF3230-□□-02					G1/4	
HVF5120-□□-02	单电控/Single Electric Control	0.15~0.90MPa	≤0.03S	5次 times /秒 second	G1/4	45mm²
HVF5120-□□-03					G3/8	
HVF5220-□□-02	双电控/Double Electric Control	0.1~0.90MPa	≤0.03S	5次 times /秒 second	G1/4	45mm²
HVF5220-□□-03					G3/8	

HVF3130外形尺寸图(mm)/Overall Dimension Drawing of HVF3130(mm)
直接出线式/Grommet type(G)

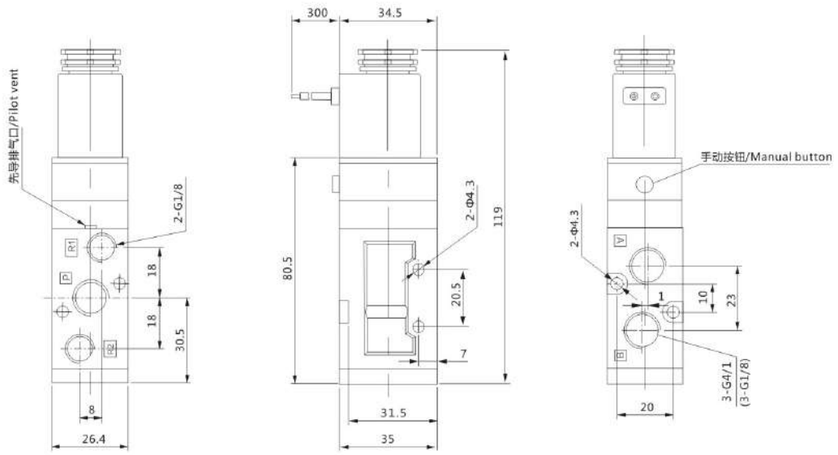

HVF3230外形尺寸图(mm)/Overall Dimension Drawing of HVF3230(mm)
直接出线式/Grommet type(G)

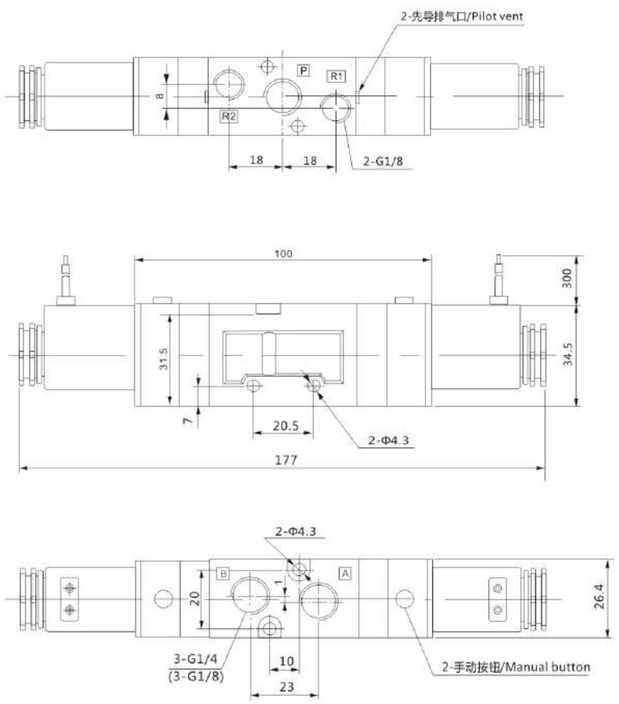

HVF3130外形尺寸图(mm)/Overall Dimension Drawing of HVF3130(mm)
插座式/Din type(D)

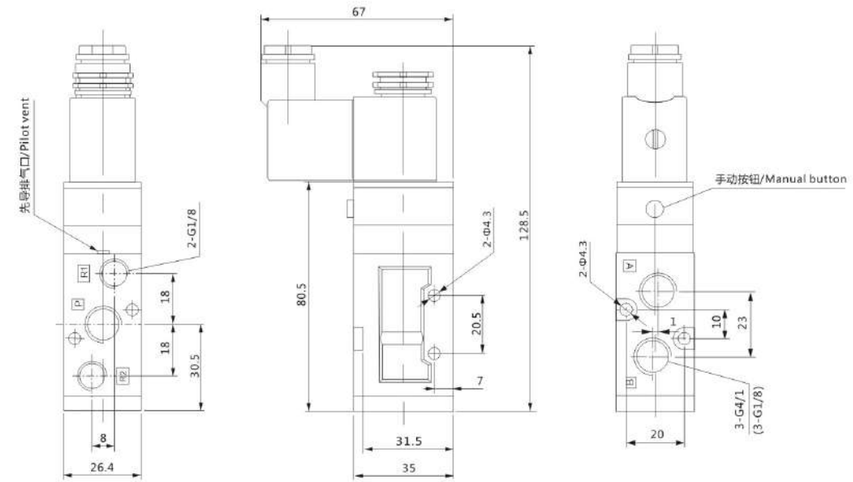

HVF3230外形尺寸图(mm)/Overall Dimension Drawing of HVF3230(mm)
插座式/Din type(D)

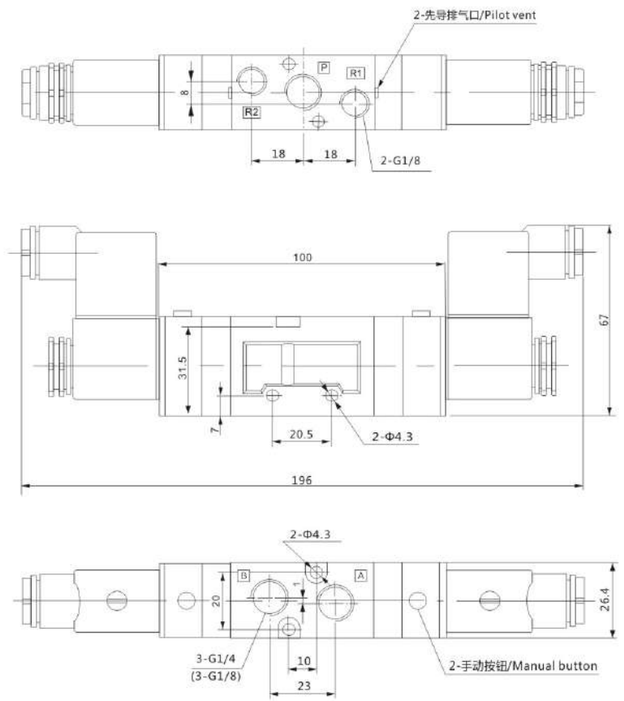

HVF5120外形尺寸图(mm)/Overall Dimension Drawing of HVF5120(mm)
直接出线式/Grommet type(G)

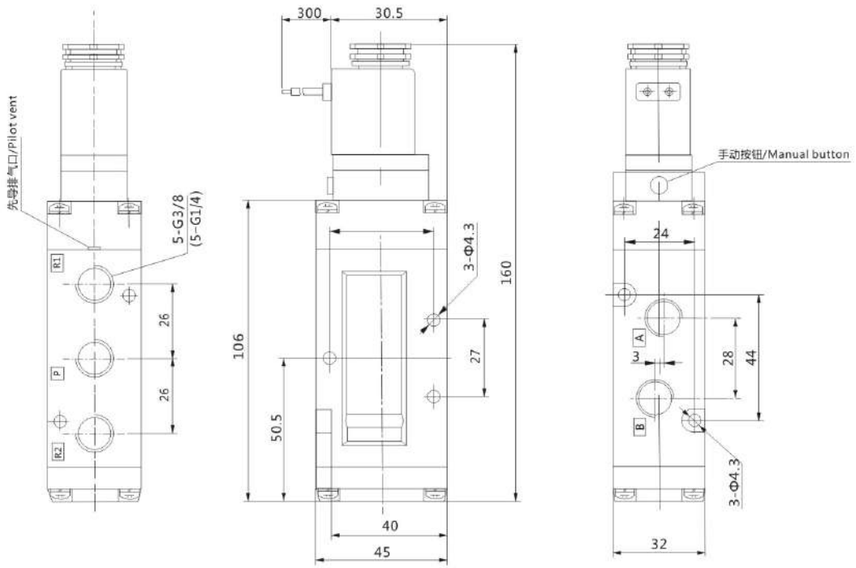

HVF5220外形尺寸图(mm)/Overall Dimension Drawing of HVF5220(mm)
直接出线式/Grommet type(G)

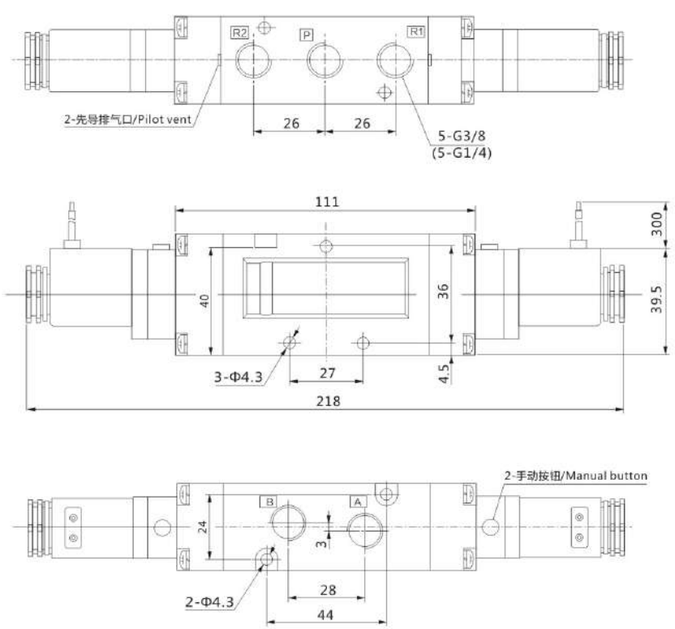

HVF5120外形尺寸图(mm)/Overall Dimension Drawing of HVF5120(mm)
插座式/Din type(D)

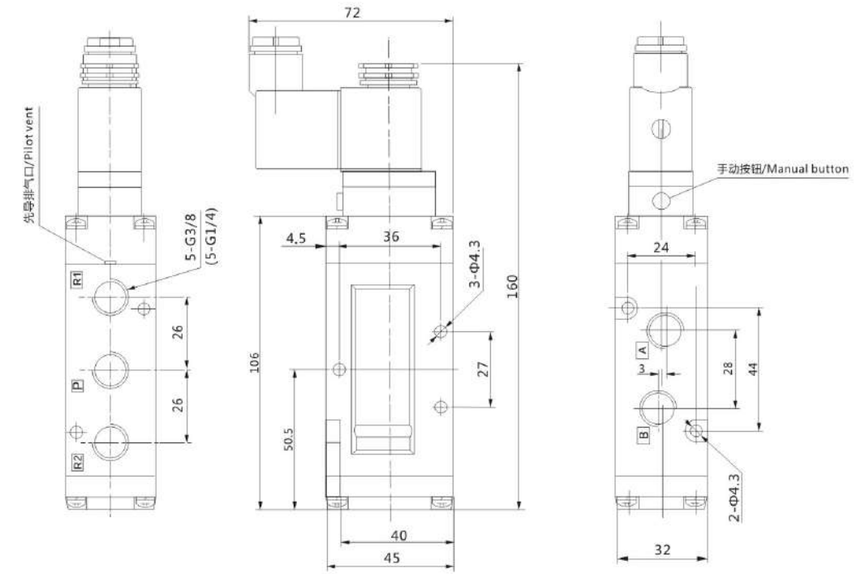

HVF5220外形尺寸图(mm)/Overall Dimension Drawing of HVF5220(mm)
插座式/Din type(D)

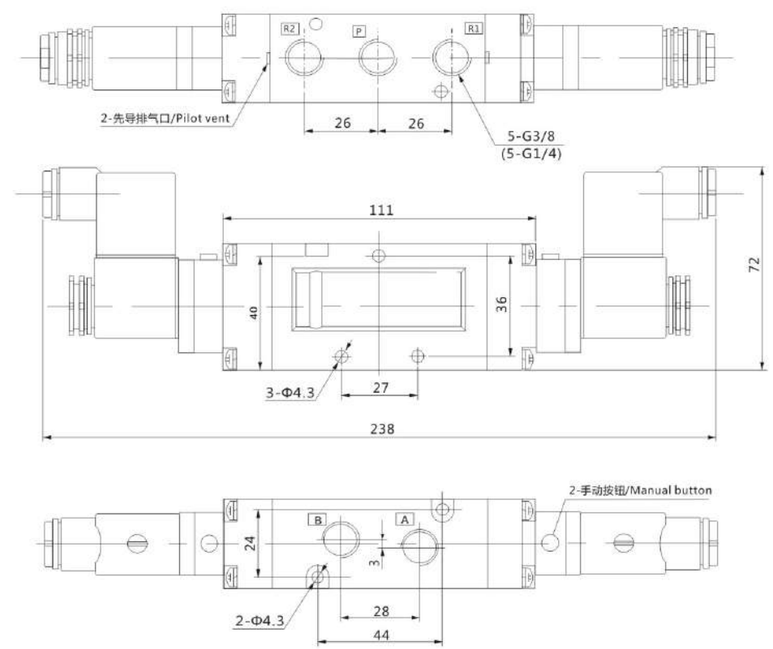

HVFA系列气控阀/HVFA Series Pneumatic Control valve
HVFA3000、5000系列/HVFA3000、5000 Series

符号/symbol

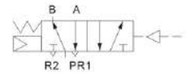

单空气控制：Single Air Control

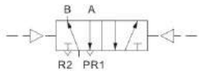

双空气控制：Double Air Control

共同规格/Common Specifications

工作介质/Working Medium	经过滤的压缩空气/Filtered Compressed Air
环境和介质温度/Ambient and Medium Temperature	5~50℃
*润滑/Lubrication	不需要/Not Required
抗冲击 Shock Resistant/震动能力 Vibration Ability	30G/5G(8.3~2000Hz)
密封/Sealing	防灰尘/Dust-Proof

*如需要润滑,请用透平1号油ISOG32. * In case lubrication is required, please use turbine No.1oill ISoVG32.

型号/Model	规格/Specifications				
	气控数/Pneumatic Control Number	工作压力 /Working Pressure	气控压力/Pneumatic Contol Pressure	接管口径/ Joint Port Size	有效截面积/ Effective Section Area
HVFA3130-01	单气控/ Single Air Control	0.15~0.90MPa	(0.04P+0.1)~ 0.9MPa 注：P为输入压力/ Prefers to input Pressure	G1/8	17.1mm²
HVFA3130-02				G1/4	
HVFA5120-02				G1/4	45mm²
HVFA5120-03				G3/8	
HVFA3230-01	双气控/ Double Air Control	0.1~0.90MPa		G1/8	17.1mm²
HVFA3230-02				G1/4	
HVFA5220-02				G1/4	45mm²
HVFA5220-03				G3/8	

外形尺寸图/ Overall Dimension Drawing(mm)

HVFA3130

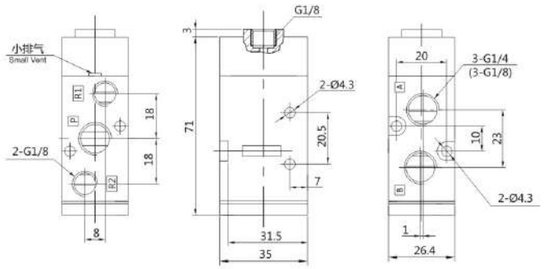

HVFA3230

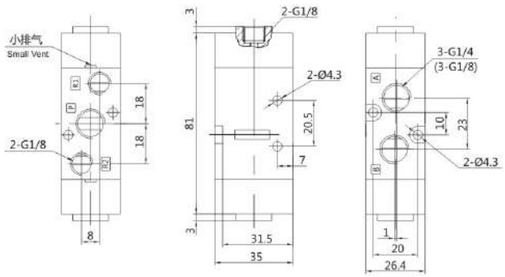

HVFA5120

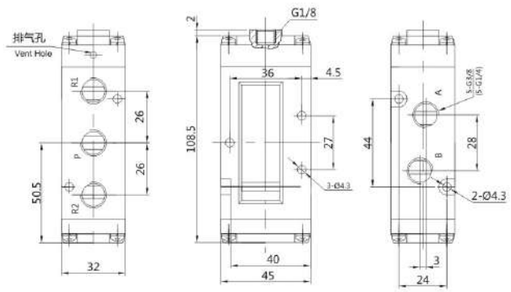

HVFA5220

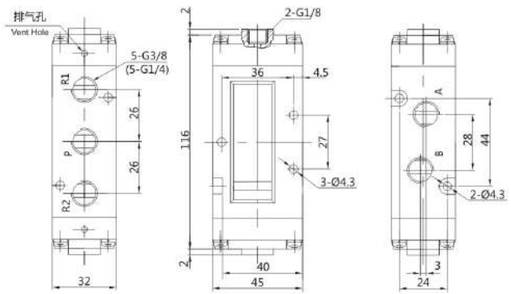

AS系列单向节流阀/AS Series Check valve
AS1000~4000系列/ Series

符号/symbol

规格/Specifications

型号/Model	AS1000	AS2000~4000
保证耐压力/ Ensured Pressure Resistance	1. 05MPa	1. 5MPa
最高使用压力/ Maximum Working Pressure	0.7MPa	1.0MPa
最低使用压力/ Minimum Working Pressure	0.1MPa	0.05MPa
环境和介质温度/ Ambient and Medium and Temperature	5~60℃	
调整流量转数/Regulated Flow Turns	10	*8~9

AS2000为9转，AS3000、AS4000为8转。Note.: *9 turns for AS2000,8 turns for AS3000 and AS4000.

型号 Model	口径 Port Size	自由流量/ Free Flow		控制流量/ Controlled Flow		重量 Weight (g)
		*流量 /Flow(L/min)	有效截面积/ Effective Sectional Area (mm²)	*流量/Flow(L/min)	有效截面积/ Effective Sectional Area(mm²)	
AS1000-M5	M5	90	1.4	80	1.2	33
AS2000-01	G1/8	340	5.2	250	3.8	90
AS2000-02	G1/4					115
AS3000-02	G1/4	810	12.3	810	12.3	130
AS3000-03	G3/8					
AS4000-02	G1/4	1670	25.5	1670	25.5	205
AS4000-03	G3/8					
AS4000-04	G1/2					

注*: 输入压力为0.5MPa。/Note: Input pressure is 0.5 MPa

外形尺寸图/Overall Dimension Drawing (mm)

AS1000-M5

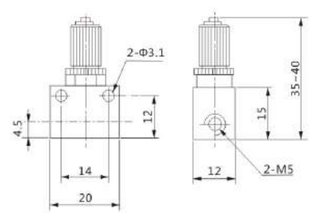

AS2000-3000

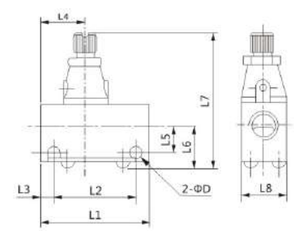

AS4000

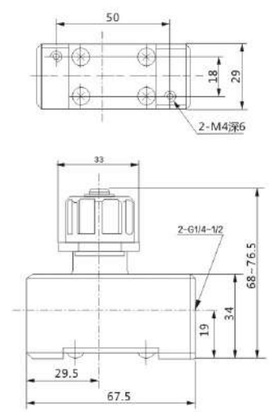

型号/Model	口径/Port Size	L1	L2	L3	L4	L5	L6	L7	L8	D
ASC2000-01	G1/8	40	30	5	17	10	15.5	50~54.5	16	4.5
ASC2000-02	G1/4	40	30	5	23	11.5	17	51.5~56	20	4.5
ASC3000-02	G1/4	56	45.5	5.25	25	13.2	21	62~69	26	5.5
ASC3000-03	G1/8	56	45.5	5.25	25	13.2	21	62~69	26	5.5

HVH系列4通手转阀/HVH Series Four- way Hand Valve
HVH200~400系列/Series



符号/symbol

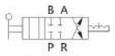

3位(中央封闭)
Three-position
(Center Closed)

3位(中央排气)
Three-positio
(Center Opened)

2位
Two-position

特点/Features

本产品有三种安装形式可供用户选择。
This series products can be mounted by three different types.

注意事项/Note

本产品的阀芯与阀体转动部位的密封形式为间隙密封，对压缩空气中灰尘、杂质等很敏感，使用时必须安装过滤精度为5um的空气过滤器，或空气过滤减压阀。

The valve core and the body of this series products are clearance seal when it is being turned, they are very sensitive to the dust, and impurity. So it must be used together with air filter or filter regulator with 5 micron filtration.

共同规格/Common Specifications

工作介质/Working Medium	经过滤的压缩空气 /Filtered Compressed Air
保证耐压力/Ensured Pressure Resistance	1. 5MPa(15kgf/cm²)
最高使用压力/Maximum Working Pressure	1.0MPa(10kgf/cm²)
环境和介质温度/Ambient and Medium Temperature	5~60℃
*润滑/Lubrication	不需要/Not Required
操作角度/Operation Angle	90°

*如需要润滑，请用透平1号油ISOVG32. / In case lubrication is required, please use turbine No.1oill ISO VG32.

型号/Model	规格/Specifications		
	位置数/Position Number	接管口径/Joint Port Size	有效截面积/ Effective Section Area(mm²)
HVH200-02	3位(中央封闭)/Three-position(Center closed)	G1/4	7.5
HVH201-02	3位(中央排气)/Three-position(Center opened)		
HVH202-02	2位/Two-position		
HVH300-03	3位(中央封闭)/ Three-position(Center closed)	G3/8	20
HVH301-03	3位(中央排气) /Three-position(Center opened)		
HVH302-03	2位/Two-position		
HVH400-04	3位(中央封闭)/Three-position(Center closed)	G1/2	55
HVH401-04	3位(中央排气)/Three-position(Center opened)		
HVH402-04	2位/Two-position		
HVH400-06	3位(中央封闭)/Three-position(Center closed)	G3/4	
HVH401-06	3位(中央排气) /Three-position(Center opened)		
HVH402-06	2位/Two-position		

4通手转阀外形尺寸图/ Overall Dimension Drawing of Four- way hand- switching valve

HVH200.201.202

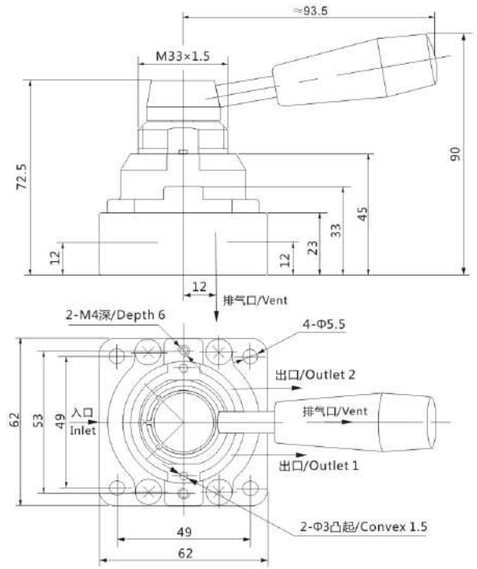

HVH300.301.302

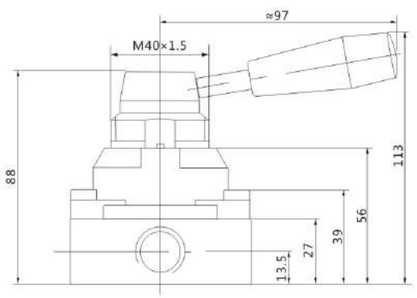

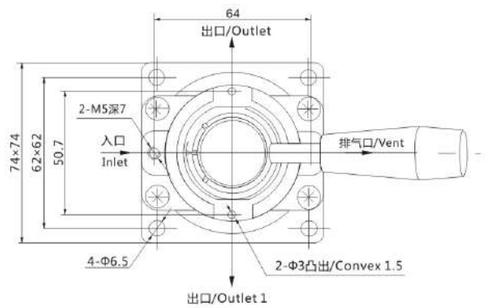

HVH400.401.402

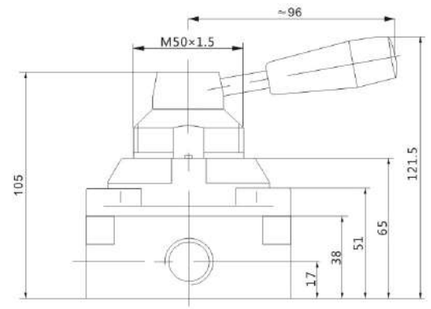

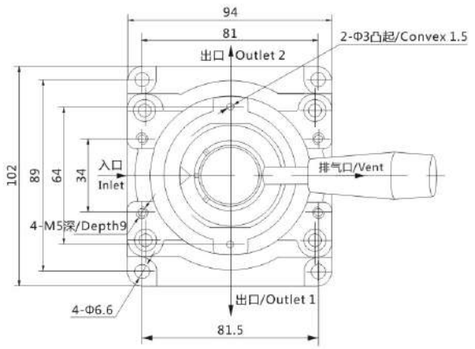

MVFA系列脚踏阀/MVFA Series Foot valve
MVFA230~240系列/Series

订购码/Ordering code

MVFA — 230 8A — L

- 230: 二位三通常闭型 Two-position Three-way Nc
- 231: 二位三通常开型 Two-position Three-way NO
- 240: 二位四通 Two-position Four-way
- 8A: Rc1/4
- L: 锁定机构 /Lock

规格/Specifications

型号/Model	MVFA-230	MVFA-231	MVFA-240
接管口径代号/Port Code	8A		
*接管口径/Port Size	Rc1/4		
气口数/Port	3		4
位置数/Position	2		
工作介质/Working Medium	经过滤的压缩空气 /Filtered Compressed Air		
介质温度和环境温度/Mediumand Ambient Temperature	5~60℃		
保证耐压力/ Ensured Pressure Resistance	1.0MPa(10kgf/cm²)		
工作压力/Working Pressure	0.2~0.7MPa(2~7kgf/cm²)		
有效截面积/Effective Section Area	8mm²		

*接管口径还有G、NPT供选择。G ,NPT thread are available.

MVFA-230-8A-(L)
MVFA-231-8A-(L)

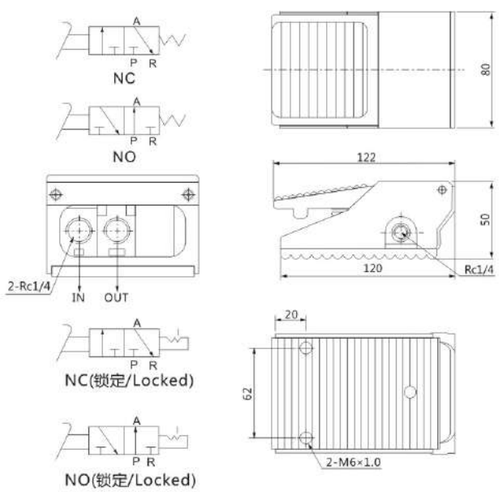

MVFA-240-8A-(L)

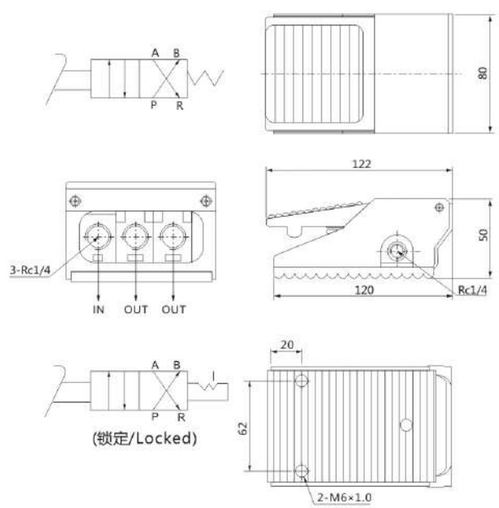

HAQ系列快速排气阀/HAQ Series Quick Exhaust valve
HAQ2000~5000系列/Series

HAQ2000

HAQ3000

HAQ5000

规格/Specifications

流体/Fluid		压缩空气/Compressed Air
保证耐压力/Ensured Pressure Resistance		15.3kgf/cm²(1.5MPa)
最高使用压力/Highest Working Pressure	HAQ2000-5000	10.2kgf/cm²(1.0MPa)
最低使用压力/Minimum Working Pressure	HAQ2000-5000	0.51kgf/cm²(0.05MPa)
环境和流体温度/Ambient and Fluid Temperature		5~60℃

型号/Model

型号/Model	口径/Port Size	有效断面积/Effective Section Area(mm²)		重量(g)
		入/IN → 出/OUT	出/OUT → 排气/EXHAUST	
HAQ2000-01	1/8	25	25	110
HAQ2000-02	1/4	35	40	105
HAQ3000-02	1/4	40	42	215
HAQ3000-03	3/8	60	70	205
HAQ5000-04	1/2	105	115	690
HAQ5000-06	3/4	135	180	695

外形尺寸图/Overall Dimension Drawing (mm)

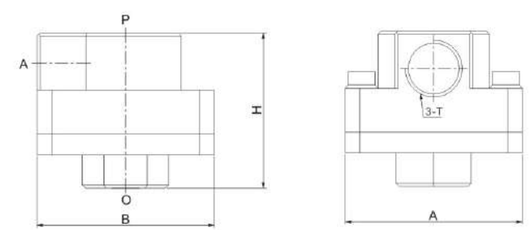

型号/Model	口径/Port Size	A	B	H
HAQ2000-01	1/8	45	45	40
HAQ2000-02	1/4	45	45	40
HAQ3000-02	1/4	56	56	50
HAQ3000-03	3/8	56	56	50
HAQ5000-04	1/2	85	85	75
HAQ5000-06	3/4	85	85	75

HXQ系列快速排气阀/HXQ Series Quick Exhaust Valve
HXQ0600~1500系列/Series

HXQ0600

HXQ1000

HXQ1500

符号/Symbol

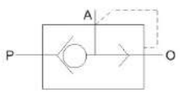

P-接换向阀输出 connect reversing valve
A-接气缸 connect cylinder
O-接消声器 connect silencer

规格/Specifications

型号/Model	接口螺纹/ Port size	通径(mm)/ Nominal diameter	流量/ Flow(m³/min)	耐久/Durability (万次 /Million times)	工作压力范围/ Working Pressure	换向时间(S)/ Reversing time
HXQ0600	G1/4	6	≥6	≥200	0.12-1.0	≤0.03
HXQ1000	G3/8	8	≥8			≤0.04
HXQ1500	G1/2	15	≥15			≤0.05

外形尺寸图/Overall Dimension Drawing (mm)

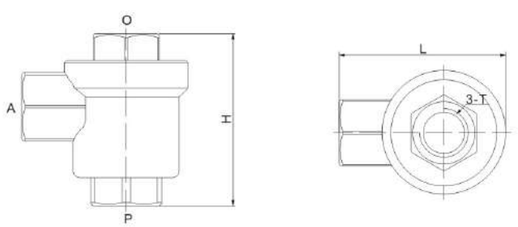

型号/Model	T	H	L
HXQ0600	G1/4	51	44
HXQ1000	G3/8	62	61
HXQ1500	G1/2	78	75

HKP系列快速排气阀/HKP Series Quick Exhaust Valve
HKP20~25系列/Series

符号/Symbol

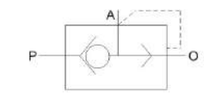

型号命名方法/ Type Denominate Method

HKP — L □

- HKP: 快速排气阀 Quick Exhaust valve
- L: 螺纹连接 Thread connection
- □: 公称通径 Inside nominal diameter

技术参数/Technical Parameters

公称通径/Inside nominal diameter		20	25
工作介质/Working Medium		干燥,洁净含有油雾的压缩空气/Dried, clean compressed air	
工作压力范围/Working Pressure Area		1.2~8(bar)	
使用温度范围/Operaing Temperature Range		-20~+50(但不在冻结条件下/Not frozen)(℃)	
有效截面积/ Effective Section Area(mm²)	P→A	110	190
	A←0	190	300
换向时间/Reversing time(S)	P→A	≤0.06	
	A←0	≤0.05	

外形尺寸/ Overall Dimension

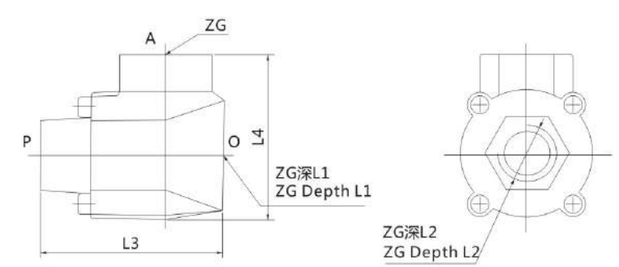

型号/Model	ZG	L1	L2	L3	L3	D
HKP-L20	G3/4"	23	23	112	100	Φ74
HKP-L25	G1"	25	25	112	100	Φ74

H2W(UW)系列电磁阀(大口径)/H2W(UW) Series Solenoid valve(Large Aperture) H2W160~500系列/Series

符号/Symbol

常闭/Normal Close　常开/Normal Open

订购码/Ordering Code

H2W 160 - 03 T - AC110V - V

规格代号
Specification Code:
H2W: 二位二通电磁阀(直动式)
H2S: 不锈钢二位二通电磁阀(直动式)
H2W : two position two way solenoid valve(Direct drive type)
H2S: stainless steel two position two Way solenoid valve(direct drive type)

流量孔径
Specification Code:
160:16mm
200:20mm
250:25mm
400:40mm
500:50mm

接管口径
Joint Port Size
03:Rc3/8
04:Rc1/2
06:Rc3/4
10:Rc1
14:Rc1 1/2
20:Rc2

初始状态
Initial estate:
空白: 常闭型
T: 常开型
Blank: Normal Close
T: Normal Open

标准电压
Standard Voltage
DC12V
DC24V
AC24V 50/60HZ
AC36V 50/60HZ
AC110V 50/60HZ
AC220V 50/60HZ
AC380V 50/60HZ

油封代号
空白:NBR
V: VITON
(高温用)
Oil Seal Code:
Blank: NBR
V:VTON
(For High-temperature)

技术参数/Technical Parameters

型号/Model	H2W160-03	H2W160-04	H2W200-06	H2W250-10	H2W400-14	H2W500-20
	H2S160-03	H2S160-04	H2S200-06	H2S250-10	H2S400-14	H2S500-20
使用介质/Working Medium	空气、水、油、瓦斯/Air、Water、Oil、Gas					
动作方式/Motion pattern	直动式 /Direct Drive					
型式/Type	常闭型 /Normal Closed Type 常开型 /Normal Opened Type					
流量孔径/Apertureof Flow Rate	16mm	16mm	20mm	25mm	40mm	50mm
Cv值/Cv Value	4.8	4.8	7.6	12	29	48
**接管口径/Joint Port Size	Rc3/8	Rc1/2	Rc3/4	Rc1	Rc1 1/2	Rc2
使用流体粘滞度/Operation Fluid Viscosity	20CSTI以下(below)					
使用压力/Working- Pressure	水/ Water: 0~5kgf/cm², 空气/Air: 0~7kgf/cm², 油/Oil: 0~5 kgf/cm², 瓦斯/Gas: 0~7kgf/cm²					
最大耐压力/Max. Pressure Resistan	10.5kgf/cm²					
工作温度范围/Operating Temperature Range	-5~80℃					
使用电压范围/Voltagte Range	±10%					
本体材质/Material of Body	H2W: 黄铜/ Brass　H2S: 不锈钢/Stain less steel					
油封材质/Material of Oil Seal	NBR ,EPDM或ViTON					

*特殊电压及规格请与厂方接洽/ Please contact Factory for special voltage and Specifcation
**接管口径还有G、NPT供选择。/G ,NPT thread are available.

外形尺寸/ Overall Dimension

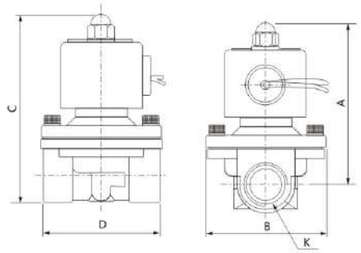

型号/Model	K	A	B	C	D
H2W160-03	Rc3/8	101.5	57	117	69
H2W160-04	Rc1/2	101.5	57	117	69
H2W200-06	Rc3/4	107	57	123.5	73
H2W250-10	Rc1	111.5	73.5	134.5	99
H2W400-14	Rc1 1/2	142	95	172	123
H2W500-20	Rc2	172	123	209	168

H2L(US)系列电磁阀(蒸汽型)/H2L(US) Series Solenoid valve(Steam Type) H2L170~500系列/ Series

符号/Symbol

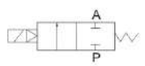

订购代号/ Ordering code

H2L 170 - 03 - AC110V

规格代号
H2L: 蒸汽型二位二通电磁阀
Specification Code:
H2L: Steam Type two position two Way solenoid valve

流量孔径
Specification Code:
170: 17mm
200: 22mm
300: 25mm
500: 50mm

接管口径
Joint Port Size
03: Rc3/8
04: Rc1/2
06: Rc3/4
10: Rc1
14: Rc1 1/2
20: Rc2

标准电压
Standard Voltage
DC12V
DC24V
AC24V 50/60HZ
AC36V 50/60HZ
AC110V 50/60HZ
AC220V 50/60HZ
AC380V 50/60HZ

技术参数/Technical Parameters

型号/Model	H2L170-03	H2L170-04	H2L170-06	H2L200-10	H2L300-14	H2L500-20
使用介质/Working Medium	空气、水、蒸汽、/Air、Water、Steam					
动作方式/Motion pattern	先导式/Guild Drive					
型式/Type	常闭型/Normal Closed Type					
流量孔径/Apertureof Flow Ratea	17mm			22mm	30mm	50mm
Cv值/Cv Value	4.8			12	20	48
**接管口径/Joint Port Size	Rc3/8	Rc1/2	Rc3/4	Rc1	Rc1 1/2	Rc2
使用流体粘滞度/Oper ation Fluid Viscosity	20CSTI以下(below)					
使用压力/Working- Pressure	1~15kgf/cm²					
最大耐压力/Max. Pressure Resistan	22.5kgf/cm²					
工作温度范围/Operating Temperature Range	-5~80℃					
使用电压范围/Voltagte Range	±10%					
本体材质/Material of Body	黄铜/ Brass					
油封材质/Material of Oil Seal	聚四氟乙烯 (PTFE)					

*特殊电压及规格请与厂方接洽/Please contact Factory for special voltage and Specifcation.
**接管口径还有G、NPT供选择。/G ,NPT thread are available.

外形尺寸/ Overall Dimension

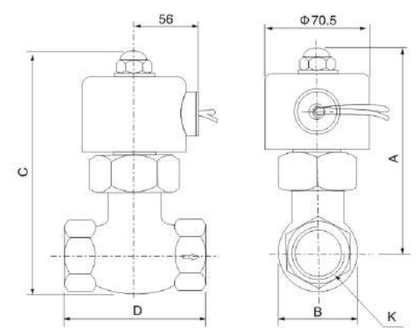

型号/Model	K	A	B	C	D
HPL170-03	Rc3/8	125	42	146	82
HPL170-04	Rc1/2	125	42	146	82
HPL170-06	Rc3/4	125	42	146	82
HPL200-10	Rc1	136	52	162	90.5
HPL300-14	Rc1 1/2	148	74	183	111
HPL500-20	Rc2	176	94.5	223	163

HPU系列电磁阀/HPU Series Solenoid valve
HPU220系列/Series



符号/Symbol

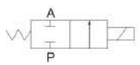

订购代号/Ordering code

HPU 220 - 01 AC110 - E

- HPU — 规格代号
  HPU: 二位二通电磁阀
  Specification Code:
  H2W: two position two way solenoid valve
- 220 — 动作方式:
  220: 直动式
  225: 先导式
  Motion Pattern
  220: Direct Drive
  225: Pilot Drive
- 01 — 接管口径 Joint Port Size
- AC110 — 标准电压 Standard Voltage
- E — 油封代号 Oil Seal Code:

技术参数/Technical Parameters

型号/Model	HPU220-01	HPU220-02	HPU220-03	HPU220-04	HPU220-06	HPU220-10
使用介质/Working Medium	空气、水、油、/Air、 Water、Oil					
动作方式/Motion pattern	220: 直动式/DirectDrive 225: 先导式/Guild Type					
型式/Type	常闭型/Normal Close Type					
流量孔径/Aperture of Flow Rate	15mm	23mm	8.0mm	13mm	20mm	25mm
Cv值/Cv Value	0.1	0.18	1.00	4.00	8.60	11.00
**接管口径/Joint Port Size	Rc3/8	Rc1/2	Rc3/4	Rc1	Rc1 1/2	Rc2
使用流体粘滞度/Oper ation Fluid Viscosity	50CST					
使用压力/Working- Pressure	0~7kgf/cm²					
最大耐压力/Max. Pressure Resistan	10.5kgf/cm²					
工作温度范围/Operating Temperature Range	-5~80℃					

*特殊电压及规格请与厂方接洽/ Please contact Factory for special voltage and Specifcation
**接管口径还有G、NPT供选择。/G ,NPT thread are available.

外形尺寸/ Overall Dimension

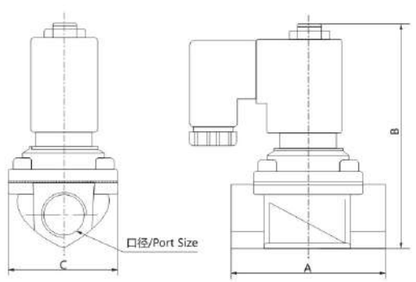

型号/Model	口径/Port Size	A	B	C
HPU220-01	Rc1/8	22	72	22
HPU220-02	Rc1/4	35	75.5	25.4
HPU220-03	Rc3/8	55	79.5	30
HPU220-04	Rc1/2	66.5	101	48
HPU220-06	Rc3/4	71	107	48
HPU220-10	Rc1	96	120	70

技术资料 / 单位换算表(美制及英制单位换算)
Technical information / Unit conversion table (American and British units conversion)

质量单位/Mass Unit

1 lb	=453.6	g
1 tonne	=1000	kg
1 ton(imp)	=1016	kg
1 ton(us)	=907.2	kg

长度单位/Length unit

1 in	=25.4	mm
1 ft	=0.3048	m
1 micron	=10^{-3}	mm

温度单位/Humidity Unit

(°F-32)×5/9	=°C
K-273.15	=°C

力矩单位/Torque Unit

1 kgm	=9.807	Nm
1 ft poundal	=0.0421	Nm
1 in lb	=0.113	Nm
1 ft lb	=1.356	Nm

功及能量单位/Energy Unit

1 Nm	=1	J
1 kgm	=9.807	J
1 kw/hr	=3.6	MJ
1 lbft	=1.356	J

面积单位/Aera Unit

1 in²	=6.45	cm²
1 ft²	=0.093	m²

压力单位/Pressure Unit

1 psi	=6.89	Kpa
1 kgf/cm²	=98.07	Kpa
1 bar	=100	Kpa
1 bar	=14.5	psi
1 mm mercury	=133.3	pa
1 in mercury	=3.39	Kpa
1 Torr	=133.3	pa
1 ft water	=0.0298	bar
1 bar	=33.33	ft water
1 atmosphere (standard)	=101.3	Kpa
1 cm water	=97.89	pa
1 in water	=248.64	pa

功率单位(功/时间)/Power Unit(Energy/hour)

1 Nm/sec	=1	W
1 lbft/sec	=1.356	W
1 kgm/sec	=9.807	W
1 Joule/sec	=1	W
1 H.P(imp)	=745.7	W

体积单位/Volume Unit

1 litre	=0.001	m³
1 cu.ft.	=0.0283	m³
1 cu.in.	=16.39	cm³
1 fuid oz(imp)	=28.41	mL
1 fuid oz(us)	=29.57	mL
1 gal(imp)	=4.546	L
1 gal(us)	=3.79	L

力单位/Force Unit

1 kgf	=9.81	N
1 lbf	=4.45	N
1 kp(kilopound)	=9.81	N
1 poundal	=138.3	mN
1 ton force	=9.964	KM

流量/Flow Raate

Cv值/Value = 水流量(US gal/min)於60℃下,流经差压力1psi之阀门而所得出之流量定值。
The water flow rate (US gal/min) is a fixed value obtained by flowing through a valve with a differential pressure of 1 psi at 60℃.

Kv值/Value = 水流量(L/min)于20℃下,流经差压力1kgf/cm²之阀门而所得出之流量定值
The water flow rate (L/min) is a fixed value obtained by flowing through a valve with a differential pressure of 1kgf/cm² at 20℃.

So = 有效截面积(mm²) / Effective cross-sectional area (mm²)

Q = 流量(NI/min) / Flow rate (NL/min)

S.T.P. = 标准温度及压力(0℃及101.3kpa绝对压力)
Standard humidity and pressure
(0℃ & 101.3KPa absolute).

M.S.C = 公制标准情况(15℃及101.3kpa绝对压力)
Metric standard case (15℃ & 101.3KPa absolute).

ANR = 温度20℃及相对湿度：65%
Temperature at 20℃ & Relative Humidity: 65%

N.T.P. = 正常温度及压力(20℃及101.3kpa绝对压力)
Normal temperature and pressure
(20℃ & 101.3KPa absolute).

换算表/Conversion Table

1psi = 6.895 kpa = 0.07kg/cm² = 0.06895 bar = 0.0703 atm
1 standard atmosphere = 14.7 psi = 101.3 kpa = 1.01325 bar
1 kg/cm²=98.07 kpa = 14.22 psi = 25.96 ins mercury
1m³ = 10⁶cm³
1ft lb = 0.13826 kgm = 1.356Nm
1 L = 1000 cm³ = 1.7598 pint = 10^6mm³
1 tonne = 1000kg = 0.984 ton = 2204.6
1 cu ft/min = 28.3 l/min
1 pa = 1N/m²

流量计算公式/Flow calculatlon formula

Q = Cv值/Value × 984
= Kv值/Value × 1100

Cv = So ÷ 18

接口螺纹代号/Port Thread Code

Rc — 内圆锥管螺纹(PT55°内螺纹)
Nner conical thread (Female PT 55°)

G — 内、外圆柱管螺纹(BSPP内、外螺纹)
Inner、outer cylindrical thread
(BSPP Male、Female thread)

R — 外圆锥管螺纹(PT55°外螺纹)
Outer conical thread (Male PT 55°)

NPT — 内、外60°圆锥管螺纹
Inner、outer 60° conical thread

气缸理论输出力表(N)/Cylinder theory table output force

气缸理论输出力F(N)/Cylinder theoretical output force F(N)

推力/Push：

$$F1=\frac{\pi D^2 P}{4}$$

拉力/Pull：

$$F2=\frac{\pi (D^2-d^2) P}{4}$$

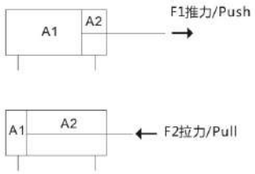

F=气缸理论输出力(N)
Cylinder Theoretical Output Force (N)

F1=气缸推力(N)/Cylinder thrust (N)

F2=气缸拉力(N)/Cylinder tension (N)

P=空气压力(MPa)/Air Pressure(MPa)

D=气缸缸径(mm)/Cylinder Diameter(mm)

d=活塞杆直径(mm)/Piston rod diameter (mm)

A=受压面积(mm^2)/Stress area(mm^2)

A1=气缸推出时受力面积(mm^2)
Stress area of cylinder push-out (mm^2)

A2=气缸缩回时受力面积(mm^2)
Stress area of cylinder retracted (mm^2)

缸径 Cylinder Diameter D(mm)	活塞杆直径 Piston rod diameter d(mm)	输出力 Output Force F(N)	受压面积 Stress Area A(mm^2)	工作压力 Work Pressure (MPa)						
				0.2	0.3	0.4	0.5	0.6	0.7	0.8
6	3	F1	28	5.6	8.4	11.2	14	16.8	19.6	22.4
		F2	21	4.2	6.3	8.1	10.5	12.6	14.7	16.8
		F1	79	15.5	23.7	31.6	39.5	47.4	55.3	63.2
		F2	66	13.2	19.8	26.4	33	39.6	46.2	52.8
12	6	F1	113	22.6	33.9	43.2	56.5	67.8	79.1	90.4
		F2	85	17.0	25.5	34.0	42.5	51.0	59.5	68.0
16	6	F1	201	40.2	60.3	80.4	100.5	120.6	140.7	160.8
		F2	172	34.4	51.6	68.8	86	103.2	120.4	137.6
20	8	F1	314	62.8	94.2	125.7	157.1	188.5	220.0	251.0
		F2	264	52.8	79.2	105.6	132.0	158.4	184.8	211.2
25	10	F1	491	98.2	147.3	196.3	245.0	294.0	344.0	393.0
		F2	412	82.4	123.4	164.8	206.0	247.2	288.4	329.6
32	12	F1	803	160.6	240.9	321.2	401.5	481.8	562.1	642.4
		F2	691	138.2	207.3	276.4	345.5	414.6	483.7	552.8
40	14	F1	1257	251.0	377.0	503.0	628.0	754.0	880.0	1010.0
		F2	1103	220.6	330.9	441.2	551.5	661.8	772.1	882.4
40	16	F1	1257	251.0	377.0	503.0	628.0	754.0	880.0	1010.0
		F2	1056	211.0	317.0	422.0	528.0	633.0	799.0	844.0
50	20	F1	1963	393	589	785	982	1178	1374	1571
		F2	1649	330	495	660	825	990	1155	1319
63	20	F1	3120	623	935	1247	1559	1870	2180	2490
		F2	2800	561	841	1121	1402	1680	1962	2240
80	25	F1	5030	1005	1508	2010	2510	3020	3520	4020
		F2	4540	907	1361	1814	2270	2720	3170	3630
100	30	F1	7850	1571	2360	3140	3930	4710	5500	6280
		F2	7150	1429	2140	2860	3570	4290	5000	5720
125	32	F1	12270	2450	3680	4910	6135	7360	8590	9820
		F2	11460	2290	3440	4580	5730	6880	8020	9170
160	40	F1	20100	4020	6030	8040	10050	12060	14070	16080
		F2	18840	3760	5650	7530	9400	11300	13180	15070
200	40	F1	31420	6280	9420	12560	15710	18850	21990	25130
		F2	30140	6020	9040	12050	15070	18080	21090	24110
250	50	F1	49060	9812	14718	19624	24530	29436	34342	39248
		F2	47100	9420	14130	18840	23550	28260	32970	37680
320	63	F1	80384	16077	24115	32154	40192	48230	56269	64307
		F2	77268	15454	23180	30907	38634	46361	54088	61814